Bernstein
Bernstein AG
Postfach 1164
D-32437 Porta Westfalica

Technical data sheet

C2-U1Z | 600.8101.001

Positive opening operation according to DIN EN 60947-5-1 IEC 60947-5-1

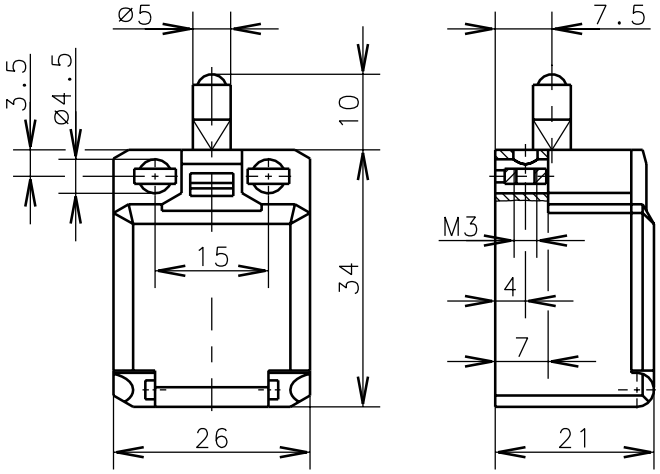

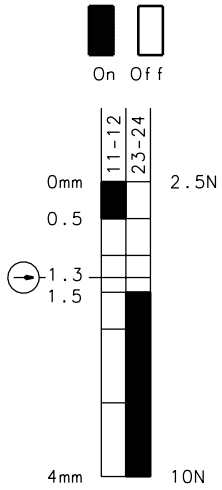

switching diagram

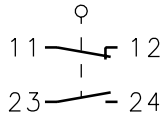

switching symbol

Tolerance: operating point ±0.25mm; actuating force ±10%

Mechanical features

Enclosure:	PBT, glass fibre reinforced
Cover:	PC, black
Actuator:	push bolt (st)
Ambient air temperature:	-30°C up to +80°C
Contact type:	1 NC-contact, 1 NO-contact (Zb)
Mechanical life:	$3x10^6$ switch operations
Switch frequency:	max. 100/min
Mounting:	from the top 2xM4, from the front 2xM3
Connection type:	4 screw connections (M3.5)
Conductor cross-section:	single core 0.5-1.5mm² / litz wire with connector sleeve 0.5-1.5mm²
Cable entry size:	rectangle 8.5x3.5mm
Weight:	approx. 0,02kg

Electrical features

Rated insulation voltage:	U_i= 250 V AC
Conventional thermal current:	I_{the}= 10A
Max. inrush current:	according to IEC 60947-5-1
Utilization categorie:	AC 15,A300 240V/3A, 120V/6A / DC 13,Q300 250V/0.27A, 125V/0.55A
Standards:	according to EN 60947-1; EN 60947-5-1
Protection class:	IP30 according to EN 60529; DIN VDE 0470 T1
CSA/UL:	10A 300V AC, A300
Short circuit protection:	Fuse 6A gL/gG, IEC/EN 60947-5-1, appendix K

Approach possibilities
The push bolt actuator is mainly intended to be actuated along it's axis. Side actuation will considerably reduce switch life.

Remarks
The moving parts should be oiled periodically.

Schutzvermerk nach DIN 34 beachten
Copyright reserved

15.08.01

Copies are not retreated in case of alternations