This document was generated on 06/05/2013

PLEASE CHECK WWW.MOLEX.COM FOR LATEST PART INFORMATION

Part Number: 560020-0700

Status: Active

Overview: DuraClik™ Connector System

Description: 2.00mm Pitch DuraClik™ Wire-to-Board Header, Single Row, Vertical, 7 Circuits, Tin (Sn) Over Nickel

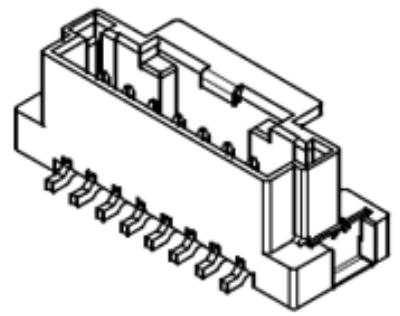

Series

image - Reference only

Documents:

Drawing (PDF)
Product Specification PS-502351-001 (PDF)
Packaging Specification PK-560020-002-JP (PDF)
RoHS Certificate of Compliance (PDF)

General

Product Family	PCB Headers
Series	560020
Application	Signal, Wire-to-Board
Overview	DuraClik™ Connector System
Product Name	DuraClik™
UPC	883906721268

Physical

Breakaway	No
Circuits (Loaded)	7
Circuits (maximum)	7
Color - Resin	Natural
Durability (mating cycles max)	30
First Mate / Last Break	No
Glow-Wire Compliant	No
Keying to Mating Part	Yes
Lock to Mating Part	Yes
Mated Height	6.40mm
Material - Metal	Copper Alloy
Material - Plating Mating	Tin
Material - Plating Termination	Tin
Net Weight	1.295/g
Number of Rows	1
Orientation	Vertical
PCB Locator	No
PCB Retention	Yes
Packaging Type	Embossed Tape on Reel
Pitch - Mating Interface	2.00mm
Polarized to Mating Part	Yes
Polarized to PCB	Yes
Stackable	No
Temperature Range - Operating	-40°C to +105°C
Termination Interface: Style	Surface Mount

Electrical

Current - Maximum per Contact	3A
Voltage - Maximum	125V

Solder Process Data

Duration at Max. Process Temperature (seconds)	40
Lead-free Process Capability	Reflow Capable (SMT only)
Max. Cycles at Max. Process Temperature	1
Process Temperature max. C	255

Material Info

EU RoHS
ELV and RoHS Compliant
REACH SVHC
Not Reviewed
Low-Halogen Status
Not Low-Halogen

China RoHS

Need more information on product environmental compliance?

Email productcompliance@molex.com
For a multiple part number RoHS Certificate of Compliance, click here

Please visit the Contact Us section for any non-product compliance questions.

Search Parts in this Series
560020Series

Mates With
502351 Crimp Housing, 50212 , 50372 Crimp Terminal

Reference - Drawing Numbers

Packaging Specification	PK-560020-002-JP
Product Specification	PS-502351-001, RPS-502351-001, RPS-502351-006-JP
Sales Drawing	SD-560020-001, SD-560020-002

This document was generated on 06/05/2013

PLEASE CHECK WWW.MOLEX.COM FOR LATEST PART INFORMATION