530555-1

DO NOT USE FOR NEW DESIGN

TE Internal #: 530555-1

Card Edge Connector Housings, Board-to-Board, 3 Position, 3.96 mm [.156 in] Centerline, 3 Dual Positions, Printed Circuit Board, Power

View on TE.com >

Connectors > PCB Connectors > Card Edge Connectors > Card Edge Connector Housings

Connector System: **Board-to-Board**

Number of Positions: **3**

Centerline (Pitch): **3.96 mm [.156 in]**

Row-to-Row Spacing: **[.156 in]**

Number of Dual Positions: **3**

Features

Product Type Features

Connector System	Board-to-Board
Connector & Contact Terminates To	Printed Circuit Board

Configuration Features

Number of Positions	3
Number of Dual Positions	3

Contact Features

Contact Current Rating (Max)	30 A

Mechanical Attachment

Connector Mounting Type	Board Mount

Housing Features

Centerline (Pitch)	3.96 mm[.156 in]

Dimensions

	.156 in

Usage Conditions

Operating Temperature Range	-55 – 105 °C[-67 – 221 °F]

Operation/Application

Circuit Application	Power

Product Compliance

For compliance documentation, visit the product page on TE.com>

EU RoHS Directive 2011/65/EU	Compliant
EU ELV Directive 2000/53/EC	Compliant
China RoHS 2 Directive MIIT Order No 32, 2016	No Restricted Materials Above Threshold
EU REACH Regulation (EC) No. 1907/2006	Current ECHA Candidate List: JUNE 2024 (241) Candidate List Declared Against: JUNE 2024 (241) Does not contain REACH SVHC
Halogen Content	Low Halogen - Br, Cl, F, I < 900 ppm per homogenous material. Also BFR/CFR/PVC Free
Solder Process Capability	Not applicable for solder process capability

Product Compliance Disclaimer

This information is provided based on reasonable inquiry of our suppliers and represents our current actual knowledge based on the information they provided. This information is subject to change. The part numbers that TE has identified as EU RoHS compliant have a maximum concentration of 0.1% by weight in homogenous materials for lead, hexavalent chromium, mercury, PBB, PBDE, DBP, BBP, DEHP, DIBP, and 0.01% for cadmium, or qualify for an exemption to these limits as defined in the Annexes of Directive 2011/65/EU (RoHS2). Finished electrical and electronic equipment products will be CE marked as required by Directive 2011/65/EU. Components may not be CE marked. Additionally, the part numbers that TE has identified as EU ELV compliant have a maximum concentration of 0.1% by weight in homogenous materials for lead, hexavalent chromium, and mercury, and 0.01% for cadmium, or qualify for an exemption to these limits as defined in the Annexes of Directive 2000/53/EC (ELV). Regarding the REACH Regulation, the information TE provides on SVHC in articles for this part number is based on the latest European Chemicals Agency (ECHA) 'Guidance on requirements for substances in articles' posted at this URL: https://echa.europa.eu/guidance-documents/guidance-on-reach

Compatible Parts

TE Part # 1-530555-1
03 DUO TYNE FLAG HSG

Customers Also Bought

TE Part #103653-1
02 MTE SHRD PIN HSG SR LATCH

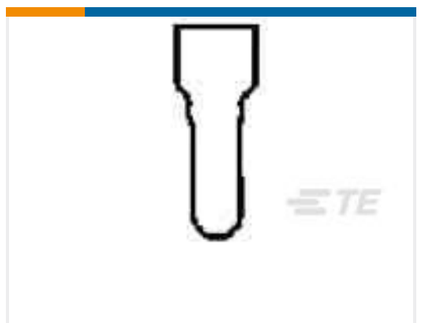

TE Part #35115
SPLICE,N CE 22-14

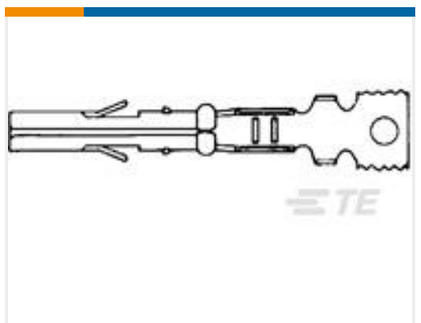

TE Part #641294-1
MR RECPT 26-18 PTPHBZ

TE Part #42547-2
RING 26-22 AWG TPBR

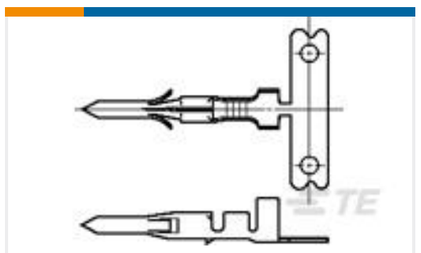

TE Part #350629-1
.062 COMM P&S PIN 18-24 PTPBR

TE Part #350654-1
UMNL GRND PIN 20-14 PTPBR

TE Part #350218-1
UMNL PIN 20-14 .0126PTPBR

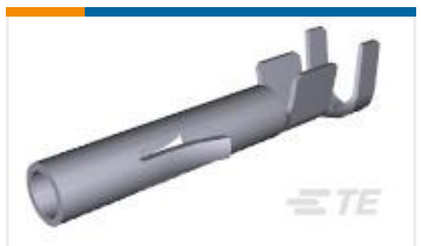

TE Part #350536-1
UMNL SOK 20-14 .0126 PTPBR

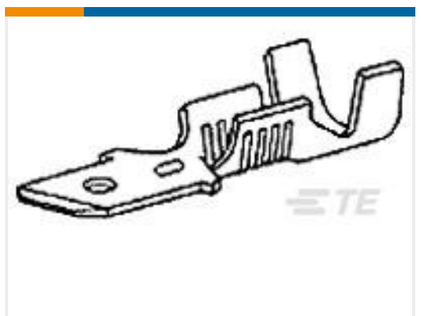

TE Part #42490-4
187 FASTON TAB 22-18 AWG BR

TE Part #2119580-1
MECHANICAL FEED ASSEMBLY

Documents

Product Drawings

DUO TYNE FLAG HSG 3 POS

English

CAD Files

3D PDF

3D

Customer View Model

ENG_CVM_CVM_530555-1_L_c-530555-1-l.2d_dxf.zip

English

Customer View Model

ENG_CVM_CVM_530555-1_L_c-530555-1-l.3d_igs.zip

English

Customer View Model

ENG_CVM_CVM_530555-1_L_c-530555-1-l.3d_stp.zip

English

By downloading the CAD file I accept and agree to the Terms and Conditions of use.

Agency Approvals

Agency Approval Document

English