This document was generated on 05/31/2013

PLEASE CHECK WWW.MOLEX.COM FOR LATEST PART INFORMATION

Part Number: 46437-1230

Status: Active

Overview: EXTreme Ten60Power™ High-Current Connector

Description: 2.00mm Pitch EXTreme Ten60Power™ Right Angle Plug Assembly with Guide Pins, 20 Signal Circuits

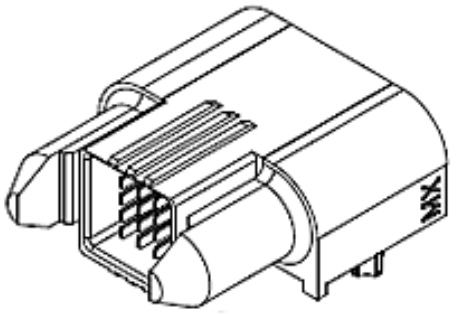

Series

image - Reference only

Documents:

Drawing (PDF)
Product Specification PS-46436-100 (PDF)
Application Specification AS-46436-100 (PDF)
RoHS Certificate of Compliance (PDF)

Agency Certification

CSA	LR19980
UL	E29179

General

Product Family	PCB Headers
Series	46437
Application	Board-to-Board, Power
Comments	See PS-46436-100 for details
Overview	EXTreme Ten60Power™ High-Current Connector
Product Name	EXTreme Ten60Power™
UPC	884982631281

Physical

(p)ower-(s)ignal Configuration	20s - 0p
Breakaway	No
Circuits (Loaded)	20
Circuits (maximum)	20
Color - Resin	Black
Durability (mating cycles max)	200
First Mate / Last Break	No
Flammability	94V-0
Glow-Wire Compliant	No
Guide to Mating Part	Yes
Keying to Mating Part	None
Lock to Mating Part	No
Mated Height	18.00mm
Material - Metal	Copper
Material - Plating Mating	Gold
Material - Plating Termination	Tin
Material - Resin	High Temperature Thermoplastic
Net Weight	0.100/g
Number of Rows	1
Orientation	Right Angle
PC Tail Length	2.84mm
PCB Locator	Yes
PCB Retention	None
PCB Thickness - Recommended	1.58mm
Packaging Type	Tray
Pitch - Mating Interface	2.00mm
Polarized to Mating Part	Yes
Polarized to PCB	Yes
Shrouded	No
Stackable	No
Surface Mount Compatible (SMC)	No
Temperature Range - Operating	-40°C to +105°C

EU RoHS
ELV and RoHS Compliant
REACH SVHC
Not Reviewed
Low-Halogen Status
Not Reviewed

China RoHS

Need more information on product environmental compliance?

Email productcompliance@molex.com
For a multiple part number RoHS Certificate of Compliance, click here

Please visit the Contact Us section for any non-product compliance questions.

Search Parts in this Series
46437Series

Mates With
46436-1230 EXTreme Ten60Power™ Receptacle

Termination Interface: Style	Through Hole - Compliant Pin

Electrical

Current - Maximum per Contact	2.5A, 60A
Voltage - Maximum	600V AC / 250V DC

Material Info

Reference - Drawing Numbers

Application Specification	AS-46436-100
Product Specification	PS-46436-100
Sales Drawing	SD-46437-1230

This document was generated on 05/31/2013

PLEASE CHECK WWW.MOLEX.COM FOR LATEST PART INFORMATION