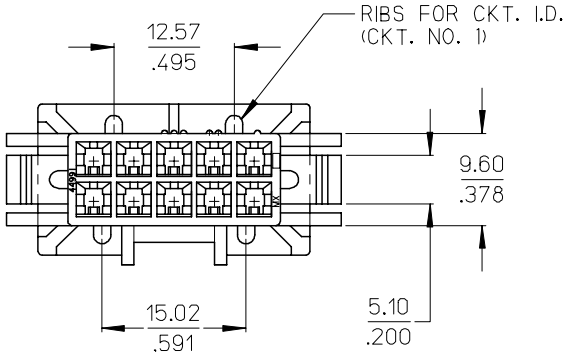

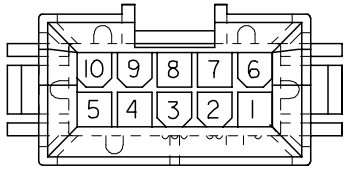

CIRCUIT NUMBERING

NOTES:
1. MATERIAL: NYLON (PA6/6, UNFILLED, UL94V-0
   COLOR: NATURAL
2. FINISH: NONE
3. PRODUCT SPECIFICATION: PS-5566-002.
4. CIRCUIT NUMBERS 3 AND 8 ARE DESIGNED TO PROVIDE MATE FIRST/BREAK LAST FUNCTION.
5. TO BE USED WITH 5558 OR 44478 MINI-FIT JR. MALE CRIMP TERMINALS.
6. WIRES ARE TO BE DRESSED IN SUCH A MANOR AS TO ALLOW TERMINALS TO FLOAT FREELY IN THE POCKET.
7. THIS PART MATES WITH MOLEX RECEPTACLES 5557, 42385 AND 42474.
8. PART ALLOWS FOR UP TO 2.54/(.100) MISALIGNMENT WITH MATING RECEPTACLE IN ANY DIRECTION. SEE MATING CONNECTOR DRAWINGS FOR SPECIFIC ALLOWANCES.
9. CONNECTOR ASSEMBLIES ARE NOT TO BE MATED OR UNMATED WHILE CIRCUITS ARE LIVE.
10. PANEL CUT-OUT TO BE PUNCHED IN THE SAME DIRECTION AS CONNECTOR INSERTION.

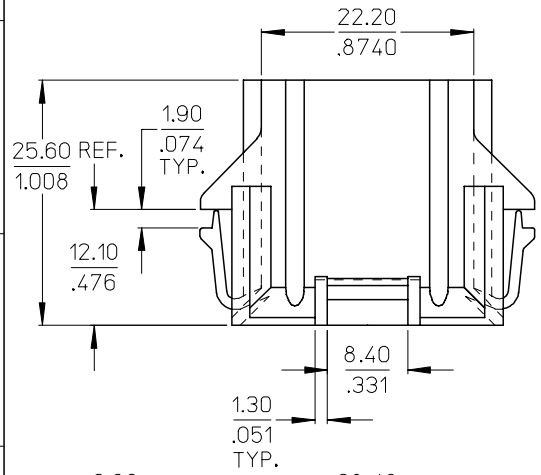

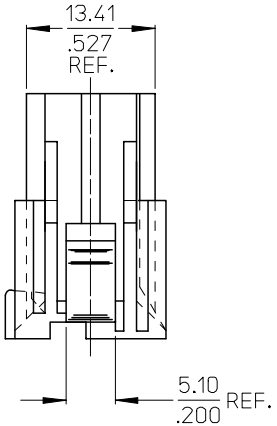

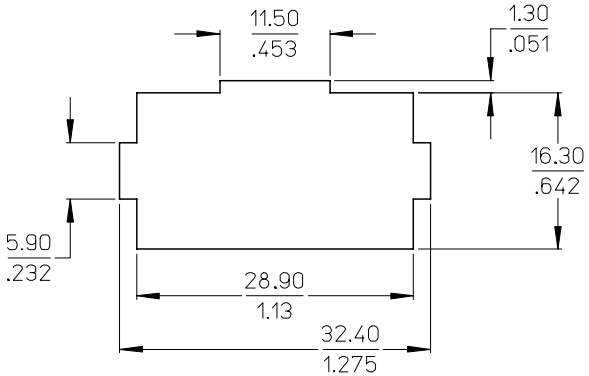

RECOMMENDED PANEL CUTOUT

PANEL THICKNESS: 1.60

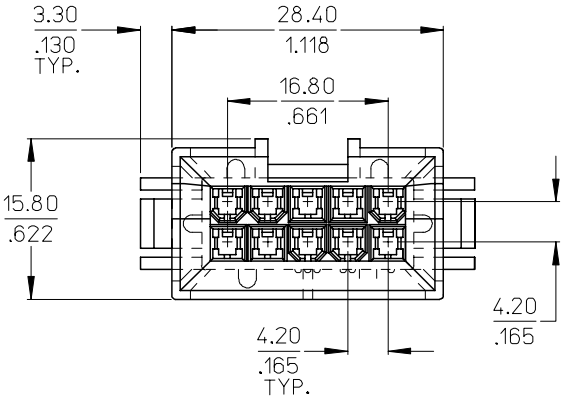

REV	DESCRIPTION
B	REVISE NOTE 3 EC NO: UCP2006-3156 DRWN:CSTEWART 2006/07/06 CH'KD:GPOLGAR 2006/07/07 APPR: JCOMERCI 2006/07/10

QUALITY SYMBOLS
▼=0
▽=0

GENERAL TOLERANCES (UNLESS SPECIFIED)

	mm	INCH
4 PLACES	± ---	± ---
3 PLACES	± ---	± ---
2 PLACES	± 0.20	± .008
1 PLACE	± 0.20	± .008
ANGULAR ±1/2°		

DRAFT WHERE APPLICABLE MUST REMAIN WITHIN DIMENSIONS

DIMENSION STYLE: MM/IN	SCALE: 2:1	DESIGN UNITS: METRIC	THIRD ANGLE PROJECTION
DRAWN BY: COMERCI	DATE: 06-12-01	TITLE: PLUG HOUSING,10 CIRCUIT #3,#8 MATE FIRST/BRK LST MINI FIT JR.	
CHECKED BY: COMERCI	DATE: 06-12-01		
APPROVED BY: COMERCI	DATE: 06-12-01	molex MOLEX INCORPORATED	
MATERIAL NO.: 449910001		DOCUMENT NO.: SD-44991-001	SHEET NO.: 1 OF 1
SIZE: B	THIS DRAWING CONTAINS INFORMATION THAT IS PROPRIETARY TO MOLEX INCORPORATED AND SHOULD NOT BE USED WITHOUT WRITTEN PERMISSION		

tb_frame_B_P_ME_T
Rev. D 2004/04/02