Product Data Sheet 4312 N/17NT

ebmpapst

The engineer's choice

GREEN TECH

4312 N/17NT

INDEX

1 General 3

2 Mechanics 3

2.1 General 3
2.2 Connections 3

3 Operating Data 5

3.1 Electrical Interface - Input 5
3.2 Electrical Operating Data 6
3.3 Electrical Interface - Output 7
3.4 Electrical Features 8
3.5 Aerodynamics 9
3.6 Sound Data 11

4 Environment 11

4.1 General 11
4.2 Climatic Requirements 11
4.3 Mechanical Requirements 11
4.4 EMC 12

5 Safety 13

5.1 Electrical Safety 13
5.2 Approval Tests 13

6 Reliability 13

6.1 General 13

1 General

Fan type	Fan	
Rotating direction looking at rotor	Clockwise	
Airflow direction	Air outlet over struts	
Bearing system	Ball bearing	
Mounting position - shaft	Any	

2 Mechanics

2.1 General

Width	119,0 mm	
Height	119,0 mm	
Depth	32 mm	
Mass	0,23 kg	
Housing material	Plastic	
Impeller material	Plastic	
Max. torque when mounted across both mounting flanges Screw size	Wire outlet corner: 80 Ncm Remaining corners: 80 Ncm ISO 4762 - M4 degreased, without an additional brace and without washer	
Rotor protrusion max.	0,4 mm	

2.2 Connections

Electrical connection	Wires	
Lead wire length Tolerance	L = 310 mm +- 10,0 mm	
Wire size (AWG)	24	
Insulation diameter	1,1 mm	

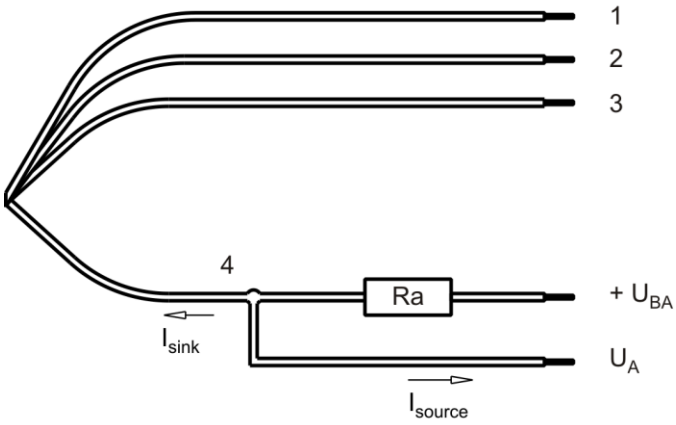

Wire	Color	Operation
1	red	+ UB
2	blue	- GND
3	violet	NTC
4	white	Alarm

The auxilliaries shown on the schematic diagram (which are required for the intended use) are not part of our delivery.

3 Operating Data

3.1 Electrical Interface - Input

Control input	External Temperature Sensor

Features

Characteristics	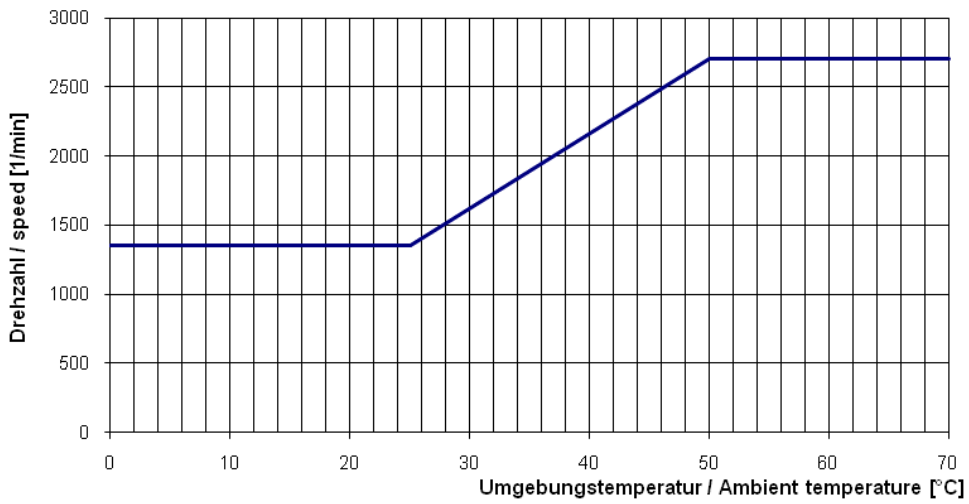
Schematics	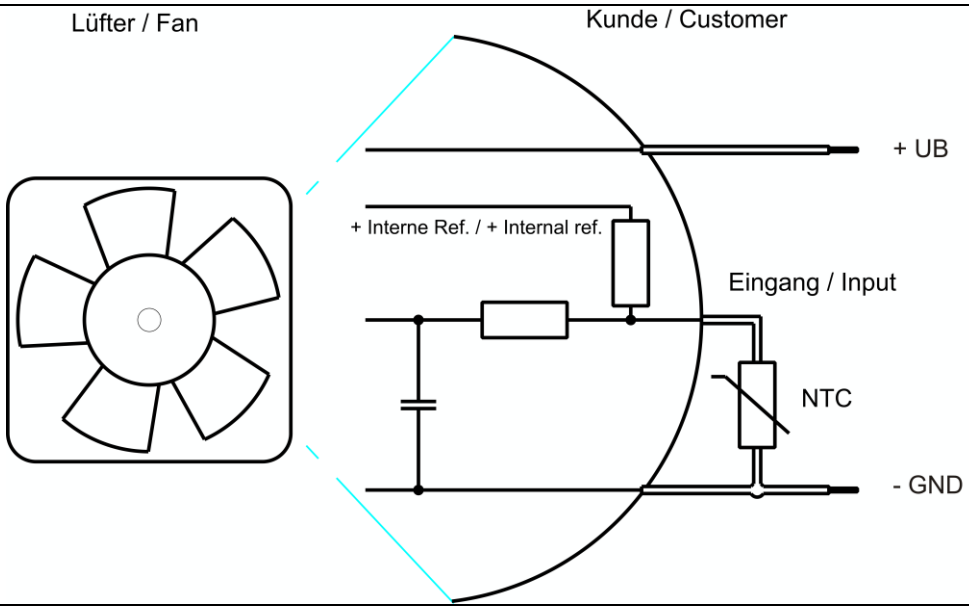

3.2 Electrical Operating Data

Measurement conditions: Normal air density = 1,2 kg/m3; Temperature 23°C +/- 3°C; Motor axis horizontal; warm-up time before measuring 5 minutes (unless otherwise specified). In the intake and outlet area should not be any solid obstruction within 0,5 m.

Δp = 0: corresp. to free air flow (see chapter aerodynamics)
I: corresp. to arithm. mean current value

Name	Condition		
TU 0001			
NTC 0001	NTC <= 33 kOhm		

Features	Condition	Symbol	Values		
Voltage range		U	8 V		13,2 V
Nominal voltage		U_N		12 V	
Power consumption Tolerance	Δp = 0 TU / NTC 0010	P	1,5 W +- 17,5 %	3,6 W +- 25 %	3,7 W +- 25 %
Current consumption Tolerance	Δp = 0 TU / NTC 0010	I	185 mA +- 17,5 %	300 mA +- 25 %	280 mA +- 25 %
Speed Tolerance	Δp = 0 TU / NTC 0010	n	1.950 1/min +- 12,5 %	2.700 1/min +- 6 %	2.700 1/min +- 6 %
Starting current consumption				1.400 mA	

3.3 Electrical Interface - Output

Alarm type	/17 (high = ok, open collector)

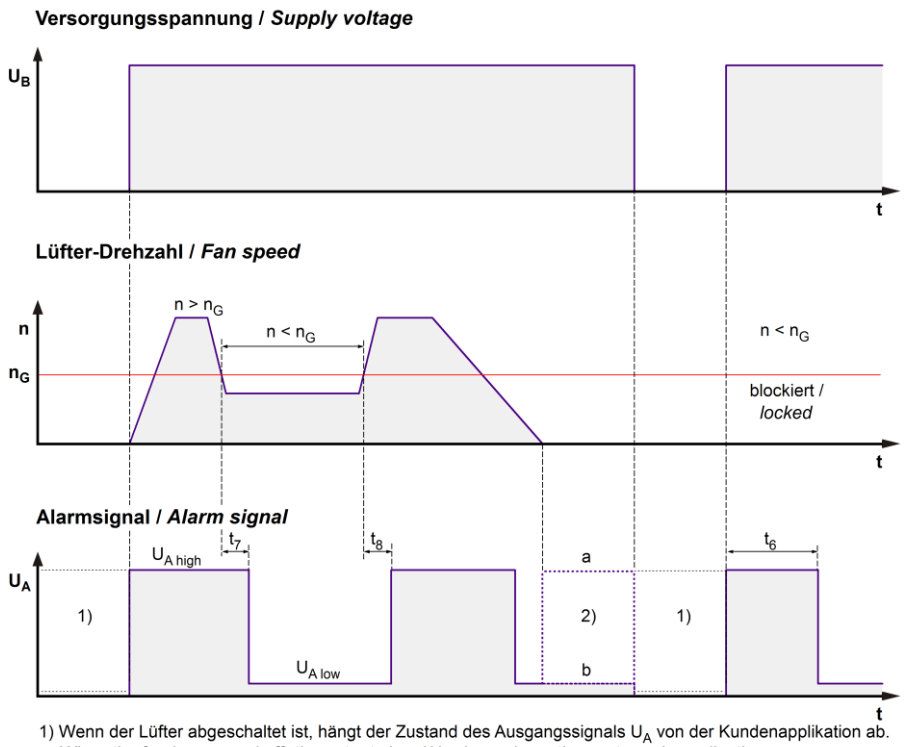

1) Wenn der Lüfter abgeschaltet ist, hängt der Zustand des Ausgangssignals U_A von der Kundenapplikation ab.
When the fan is powered off, the output signal U_A depends on the customer's application.
2) Für den gültigen Zustand (a oder b) siehe Alarmunterdrückung in der Tabelle.
For the valid condition (a or b) see alarm suppression in the table.

$$Ra = \frac{U_{BA} - U_{A\,low}}{I_{sink}}$$

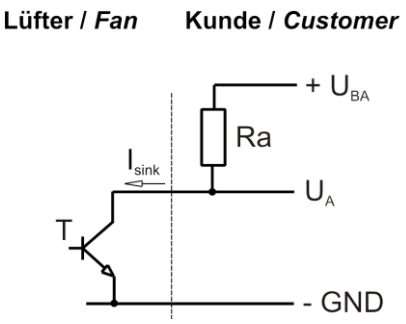

Features		Note	Values
Alarm operating voltage	U_{BA}		<= 60 V
Alarm signal Low	$U_{A\,low}$	I sink: 2 mA	<= 0,4 V
Alarm signal High	$U_{A\,high}$	I source: 0 mA	60 V
Maximum sink current	I_{sink}		20 mA
External resistor		External resistor Ra from UBA to UA required. All voltage measured to GND.	
Alarm start-up delay time	t_6		<= 10 s
Alarm trip speed limit	n_G		1.100 1/min
Alarm trip speed limit hysteresis	$n_{G\,Hys}$		100 1/min
Alarm at sense failure		No	
Alarm latch		No	
Alarm isolated from motor		No	

3.4 Electrical Features

Electronic function	Speed-Controlled	
Reversed polarity protection Max. residual current at U_N	Rectifying diode I_F < 100 uA	
Locked rotor protection	Auto restart	
Locked rotor current at U_N	I_{block} approx. 1.300 mA	
Clock signal at locked rotor	t_3 / t_4 typical: 0,5 s / 10 s	

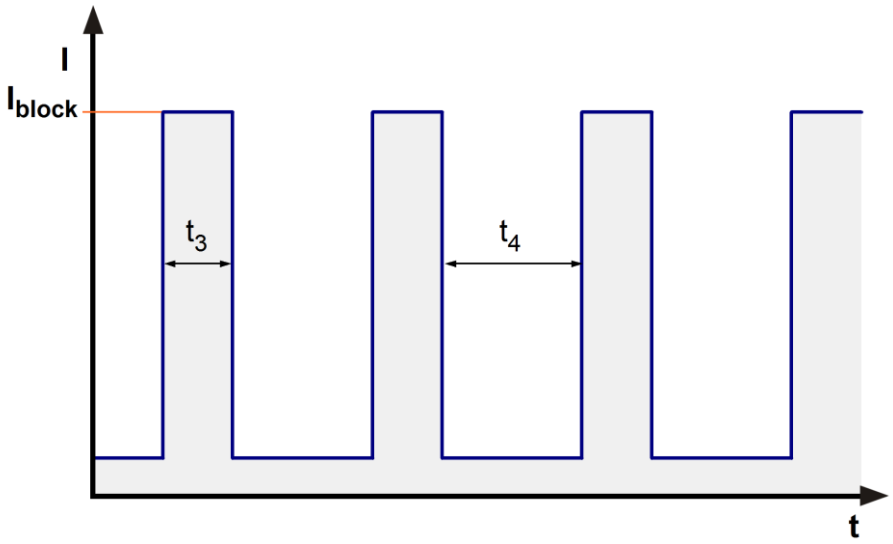

3.5 Aerodynamics

Measurement conditions:	Measured with a double chamber intake rig acc. to DIN EN ISO 5801. Normal air density = 1,2 kg/m3; Temperature 23°C +/- 3°C; In the intake and outlet area should not be any solid obstruction within 0,5 m. Motor shaft horizontal. The information is only valid under the specified test conditions and may be changed by the installation conditions. If there are deviations from the standard test conditions, the characteristic values must be checked under the installed conditions. Power consumption of the fan motor when operating at normal voltage is shown. Depending on the operating conditions of the application, the power input may be higher.

a.) Operation condition:

2.700 1/min at free air flow	NTC <= 33 kOhm		

Max. free-air flow (Δp = 0 / V̇ = max.)	187 m3/h	
Max. static pressure (Δp = max. / V̇ =0)	66 Pa	

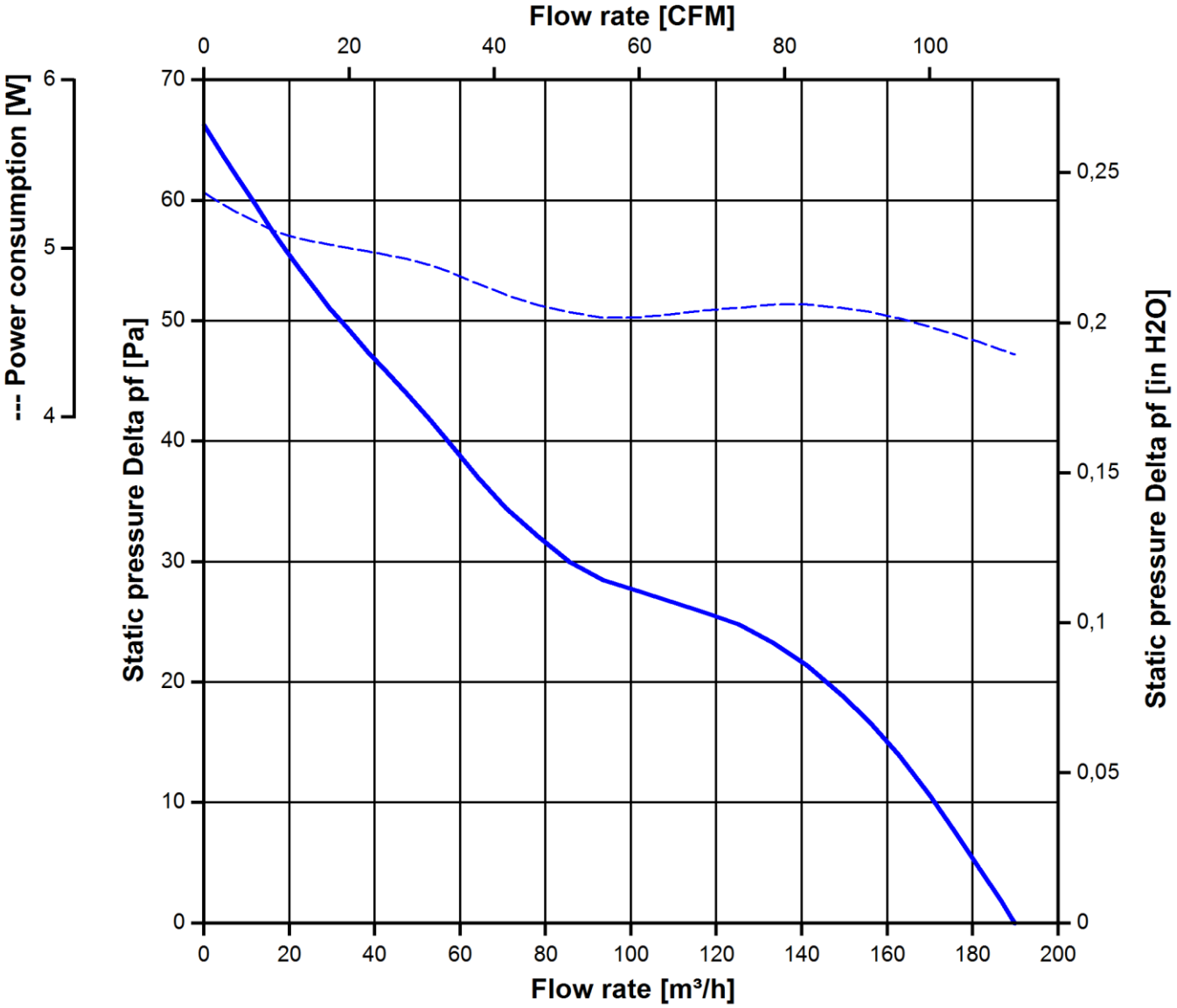

3.6 Sound Data

Measurement conditions:	Sound pressure level: 1 meter distance between microphone and the air intake. Sound power level: Acc. to DIN 45635 part 38 (ISO 10302) Measured in a semianchoic chamber with a background noise level of Lp(A) < 5 dB(A) For further measurement conditions see chapter aerodynamics.

a.) Operation condition:

2.700 1/min at free air flow	NTC <= 33 kOhm		

Optimal operating point	138 m3/h @ 22 Pa	
Sound power level at the optimal operating point	5,4 bel(A)	
Sound pressure level at free air flow, measured in rubber bands	43 dB(A)	

4 Environment

4.1 General

Min. permitted ambient temperature TU min.	-20 °C	
Max. permitted ambient temperature TU max.	70 °C	
Min. permitted storage temperature TL min.	-40 °C	
Max. permitted storage temperature TL max.	80 °C	

4.2 Climatic Requirements

Humidity requirements	humid heat, constant; according to DIN EN 60068-2-78, 14 days	
Water exposure	None	
Dust requirements	None	
Salt fog requirements	None	

Permitted application area:
The product is intended for use in sheltered rooms with controlled temperature and controlled humidity. Directly exposure to water must be avoided.

Pollution degree 1 (according DIN EN 60664-1)
There is either no pollution or it occurs only dry, non-conductive pollution. The pollution has no negative impact.

4.3 Mechanical Requirements

severity level	Vibration (sinusoidal)	
0,5 G	Vibration (sinusoidal) in use IEC 60068-2-6 Displacement / frequency range Acceleration / frequency range Sweep rate Sweep cycles	 Vibration (sinusoidal) 0,035 mm / 10-60, 60-10 Hz 0,5 G / 60-500-60 Hz 1 Oct./min 10

	Duration Axes of vibration	2 hrs. 3

severity level	stationary use		
1	storage / transportation	Random vibration not in use IEC 60068-2-64 Frequency range / ASD G_{RMS} Axes of vibration Test duration	 Random vibration 5 - 20 Hz : 1,0 m² / s³ 20 - 500 Hz : - 3 dB / Oct 0,91 G 3 3 x 5 h
	storage / transportation	Bump not in use IEC 60068-2-29 Shock spectrum Acceleration Duration Number of bumps (+X, -X, -Y, +Y, -Z, +Z) Total bumps	 Bump half sine 18 G 6 ms 100 in each direction 600
	stationary use	Random vibration in use IEC 60068-2-64 Frequency range / ASD G_{RMS} Axes of vibration Test duration	 Random vibration 5 - 20 Hz : 2,0 m^2 / s^3 20- 150 Hz : - 3 dB / Oct 0,83 G 3 3 x 5 h
	stationary use	Bump in use IEC 60068-2-29 Shock spectrum Acceleration Duration Number of bumps (+X, -X, -Y, +Y, -Z, +Z) Total bumps	 Bump half sine 5 G 11 ms 100 in each direction 600

4.4 EMC

Kind	**Radiated Emission; 30 MHz - 1000 MHz**
According	DIN EN 55022:2007-04
Ceck accuracy / Limit	Class B
Result	Below limit Class B

5 Safety

5.1 Electrical Safety

Dielectric strength DIN EN 60950 (VDE 0805) and DIN EN 60335 (VDE 0700) A.) Type test Measuring conditions: After 48h of storage at 95% R.H. and 25°C. No arcing or breakdown is allowed! All connections together to ground. B.) Routine test Measuring conditions: At indoor climate. No arcing or breakdown is allowed! All connections together to ground.	 500 VAC / 1 Min. Not applicable	
Isolation resistance Measuring conditions: After 48h of storage at 95% R.H. and 25°C measured with U=500 VDC for 1 min.	RI > 10 MOhm	
Clearance / creepage distance	1,0 mm / 1,2 mm	
Protection class	III	

5.2 Approval Tests

CE	EC Declaration of Conformity	Yes
EAC	Eurasian Conformity	Yes
UL	Underwriters Laboratories	Yes / UL507, Electric Fans
VDE	Association for Electrical, Electronic and Information Technologies	Yes / Approval acc. to EN 60950 (VDE 0805) - Information technology equipment
CSA	Canadian Standards Association	Yes / C22.2 No. 113 Fans and Ventilators
CCC	China Compulsory Certification	Not applicable

6 Reliability

6.1 General

Life expectancy L10 at TU = 40 °C	72.500 h	
Life expectancy L10 at TU max.	37.500 h	
Life expectancy L10 acc. to IPC 9591 at TU = 40 °C	122.000 h	

Copying of this document, and giving it others and the use or communication of the contents thereof, are forbidden without express authority. Offenders are liable to the payment of damages. All rights are reserved in the event of the grant of a patent or the registration of a utility model or design.

Schutzvermerk nach DIN 34 1010 beachten !
Refer to protection notice DIN 34 1010 !

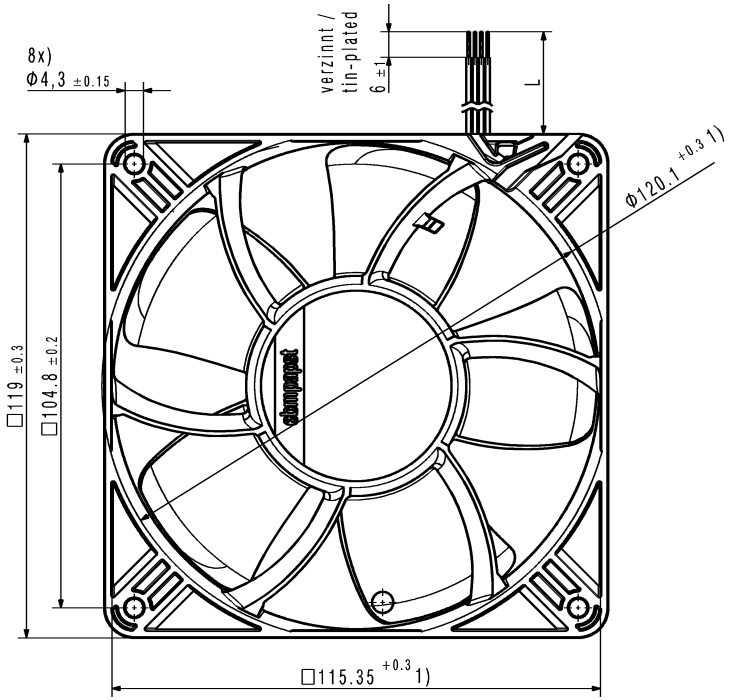

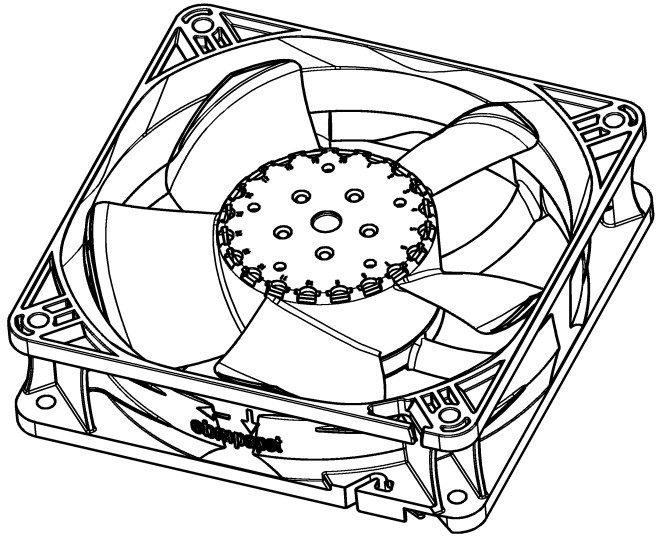

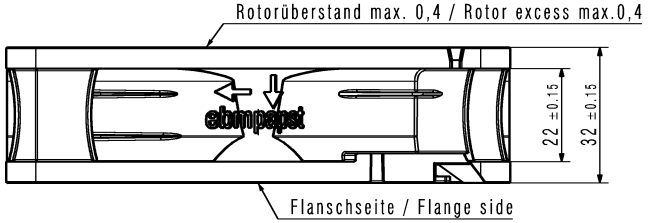

1) Maße für Montagewand / Dimensions for assembly wall
- Kein Axialspiel der Kugellager durch Federausgleich /
  No axial clearance of ball bearings due to a pre-load spring
- Anzahl und Länge der Litzen siehe Produktspezifikation Blatt 1
  Number and length of the wires see design specification sheet 1

Dokument-Status / Document-State	CATIA-Version/ CATIA-Version	CAD-Umgebung/ CAD-Environment	Werkstoff / Material:	Volumen / Volume (mm^3):
Aend.-Nr./ Change-No.	9893550180 CPR000 -			Gewicht / Mass (g):
	3D-Referenzmodell / 3D-Referencemodel		Artikel / Title:	
Tolerierung / Tolerances:	Datum	Name		
	Bearb./ Drawn			
Allgemeintoleranzen / Gen. Tolerances:	Gepr./ Checked		Zchg.-Nr./ Drawing No:	Ers.f.Zchg. / Replaces:
	Freig./ Release.			
	ebmpapst		Dokumenttyp / Type of Document	Teildokument (Blatt/Page)	Index / Index	Format / Size:	Massstab/Scale
	ebm-papst St.Georgen GmbH & Co KG				-		