SIEMENS

Data sheet 3RV1011-1KA10

Circuit breaker size S00 for motor protection, CLASS 10 A-release 9...12 A N-release 156 A Screw terminal Standard switching capacity

product brand name	SIRIUS
product designation	Circuit breaker
design of the product	For motor protection
product type designation	3RV1
General technical data	
size of the circuit-breaker	S00
size of contactor can be combined company-specific	S00
product extension auxiliary switch	Yes
power loss [W] for rated value of the current	
● at AC in hot operating state	9.25 W
● at AC in hot operating state per pole	3.1 W
insulation voltage with degree of pollution 3 at AC rated value	690 V
surge voltage resistance rated value	6 kV
mechanical service life (operating cycles)	
● of the main contacts typical	100 000
● of auxiliary contacts typical	100 000
electrical endurance (operating cycles) typical	100 000
type of protection according to ATEX directive 2014/34/EU	Ex II (2) GD
certificate of suitability according to ATEX directive 2014/34/EU	DMT 02 ATEX F 001
reference code according to IEC 81346-2	Q
Substance Prohibitance (Date)	01/01/2013
SVHC substance name	Blei - 7439-92-1
Ambient conditions	
installation altitude at height above sea level maximum	2 000 m
ambient temperature	
● during operation	-20 ... +60 °C
● during storage	-50 ... +80 °C
● during transport	-50 ... +80 °C
relative humidity during operation	10 ... 95 %
Main circuit	
number of poles for main current circuit	3
adjustable current response value current of the current-dependent overload release	9 ... 12.5 A
operating voltage	
● rated value	20 ... 690 V
● at AC-3 rated value maximum	690 V
● at AC-3e rated value maximum	690 V
operating frequency rated value	50 ... 60 Hz
operational current rated value	12 A
operational current	

Subject to change without notice
© Copyright Siemens

● at AC-3 at 400 V rated value	12 A
● at AC-3e at 400 V rated value	12 A
operating power	
● at AC-3	
— at 230 V rated value	3 kW
— at 400 V rated value	5.5 kW
— at 500 V rated value	5.5 kW
— at 690 V rated value	7.5 kW
● at AC-3e	
— at 230 V rated value	3 kW
— at 400 V rated value	5.5 kW
— at 500 V rated value	5.5 kW
— at 690 V rated value	7.5 kW
operating frequency	
● at AC-3 maximum	15 1/h
● at AC-3e maximum	15 1/h
Auxiliary circuit	
number of CO contacts for auxiliary contacts	0
Protective and monitoring functions	
product function	
● ground fault detection	No
● phase failure detection	Yes
trip class	CLASS 10
design of the overload release	thermal
maximum short-circuit current breaking capacity (Icu)	
● at AC at 240 V rated value	100 kA
● at AC at 400 V rated value	50 kA
● at AC at 500 V rated value	3 kA
● at AC at 690 V rated value	2 kA
operating short-circuit current breaking capacity (Ics) at AC	
● at 240 V rated value	100 kA
● at 400 V rated value	13 kA
● at 500 V rated value	3 kA
● at 690 V rated value	2 kA
response value current of instantaneous short-circuit trip unit	156 A
UL/CSA ratings	
full-load current (FLA) for 3-phase AC motor	
● at 480 V rated value	12 A
● at 600 V rated value	12 A
yielded mechanical performance [hp]	
● for single-phase AC motor	
— at 110/120 V rated value	0.5 hp
— at 230 V rated value	2 hp
● for 3-phase AC motor	
— at 200/208 V rated value	3 hp
— at 220/230 V rated value	3 hp
— at 460/480 V rated value	8 hp
— at 575/600 V rated value	10 hp
Short-circuit protection	
product function short circuit protection	Yes
design of the short-circuit trip	magnetic
design of the fuse link for IT network for short-circuit protection of the main circuit	
● at 240 V	gL/gG 80 A
● at 400 V	gL/gG 80 A
● at 500 V	gL/gG 50 A
● at 690 V	gL/gG 50 A
Installation/ mounting/ dimensions	
mounting position	any
fastening method	screw and snap-on mounting onto 35 mm DIN rail according to DIN EN 60715
height	90 mm

Subject to change without notice
© Copyright Siemens

width	45 mm
depth	75 mm
required spacing	
● for grounded parts at 400 V	
— downwards	20 mm
— upwards	20 mm
— at the side	9 mm
● for live parts at 400 V	
— downwards	20 mm
— upwards	20 mm
— at the side	9 mm
● for grounded parts at 500 V	
— downwards	20 mm
— upwards	20 mm
— at the side	9 mm
● for live parts at 500 V	
— downwards	20 mm
— upwards	20 mm
— at the side	9 mm
● for grounded parts at 690 V	
— downwards	20 mm
— upwards	20 mm
— backwards	0 mm
— at the side	9 mm
— forwards	0 mm
● for live parts at 690 V	
— downwards	20 mm
— upwards	20 mm
— backwards	0 mm
— at the side	9 mm
— forwards	0 mm
Connections/ Terminals	
type of electrical connection	
● for main current circuit	screw-type terminals
arrangement of electrical connectors for main current circuit	Top and bottom
type of connectable conductor cross-sections	
● for main contacts	
— solid or stranded	2x (0,5 ... 1,5 mm²), 2x (0,75 ... 2,5 mm²), 2x (1 ... 4 mm²)
— finely stranded with core end processing	2x (0.5 ... 1.5 mm²), 2x (0.75 ... 2.5 mm²)
type of connectable conductor cross-sections	
● for auxiliary contacts	
— solid or stranded	2x (0.5 ... 1.5 mm²), 2x (0.75 ... 2.5 mm²)
tightening torque	
● for main contacts with screw-type terminals	0.8 ... 1.2 N·m
● for auxiliary contacts with screw-type terminals	0.8 ... 1.2 N·m
size of the screwdriver tip	Pozidriv size 2
design of the thread of the connection screw	
● for main contacts	M3
Safety related data	
proportion of dangerous failures	
● with low demand rate according to SN 31920	50 %
● with high demand rate according to SN 31920	50 %
failure rate [FIT] with low demand rate according to SN 31920	50 FIT
B10 value with high demand rate according to SN 31920	5 000
Electrical Safety	
protection class IP on the front according to IEC 60529	IP20
touch protection on the front according to IEC 60529	finger-safe, for vertical contact from the front
display version for switching status	Rocker switch
Approvals Certificates	

Subject to change without notice
© Copyright Siemens

General Product Approval					
EG-Konf.	CCC	UKCA	Confirmation	UL	EAC

For use in hazardous locations		Test Certificates		Marine / Shipping	
ATEX	IECEx	Type Test Certificates/Test Report	Special Test Certificate	ABS	BUREAU VERITAS

Marine / Shipping					other
DNV	LRS	PRS	RINA	RMRS	Miscellaneous

other		Railway
Confirmation	VDE	Special Test Certificate

Further information

Information on the packaging
https://support.industry.siemens.com/cs/ww/en/view/109813875
Information- and Downloadcenter (Catalogs, Brochures,…)
https://www.siemens.com/ic10
Industry Mall (Online ordering system)
https://mall.industry.siemens.com/mall/en/en/Catalog/product?mlfb=3RV1011-1KA10
Cax online generator
http://support.automation.siemens.com/WW/CAXorder/default.aspx?lang=en&mlfb=3RV1011-1KA10
Service&Support (Manuals, Certificates, Characteristics, FAQs,...)
https://support.industry.siemens.com/cs/ww/en/ps/3RV1011-1KA10
Image database (product images, 2D dimension drawings, 3D models, device circuit diagrams, EPLAN macros, ...)
http://www.automation.siemens.com/bilddb/cax_de.aspx?mlfb=3RV1011-1KA10&lang=en
Characteristic: Tripping characteristics, I^2t, Let-through current
https://support.industry.siemens.com/cs/ww/en/ps/3RV1011-1KA10/char
Further characteristics (e.g. electrical endurance, switching frequency)
http://www.automation.siemens.com/bilddb/index.aspx?view=Search&mlfb=3RV1011-1KA10&objecttype=14&gridview=view1

Subject to change without notice
© Copyright Siemens

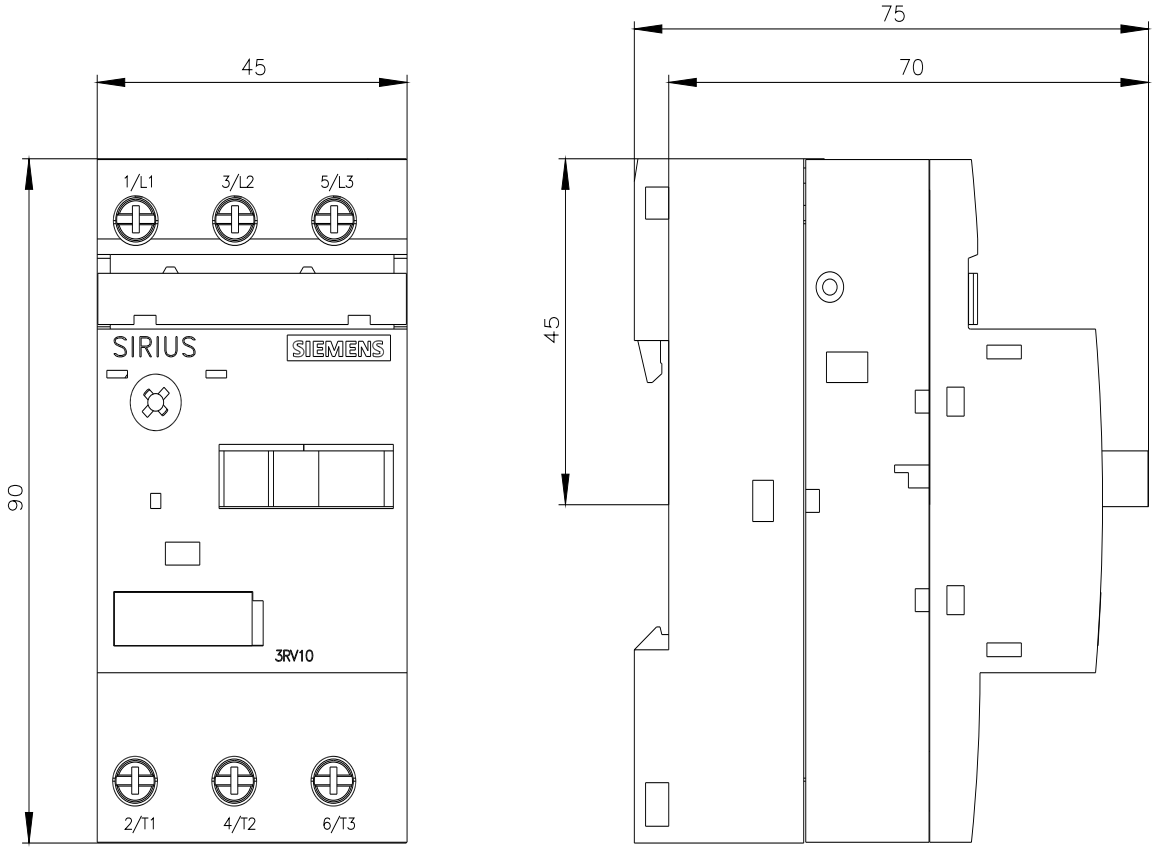

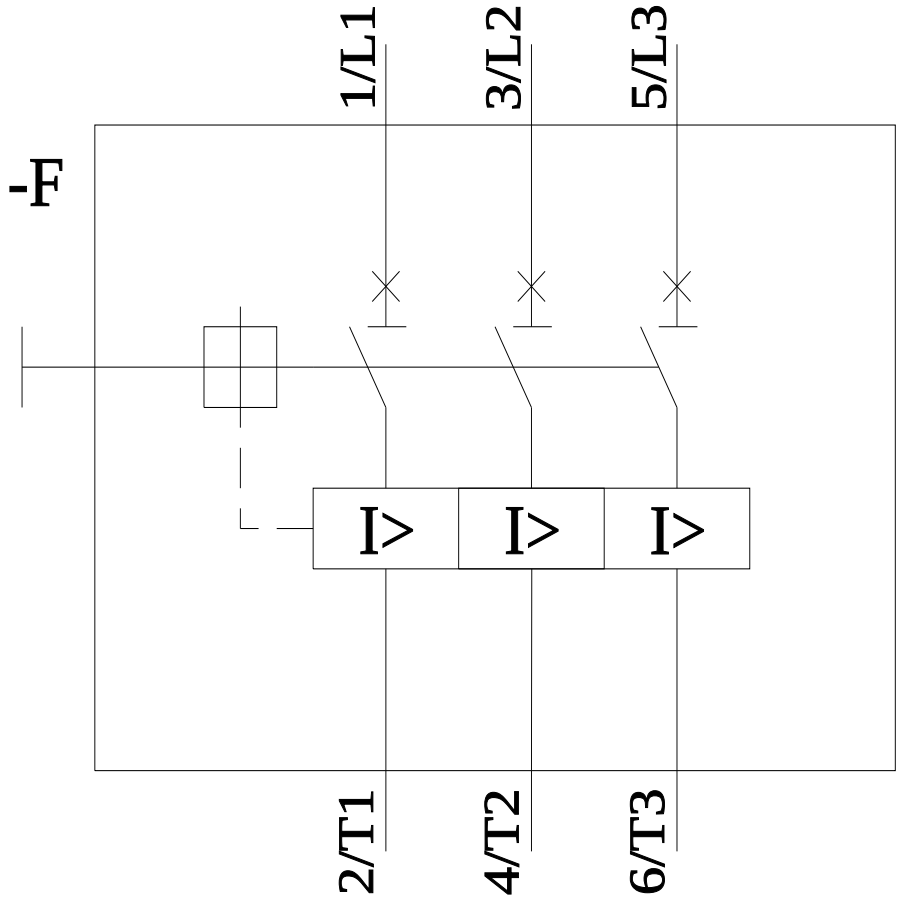

last modified: 9/5/2023

Subject to change without notice
© Copyright Siemens

Subject to change without notice
© Copyright Siemens