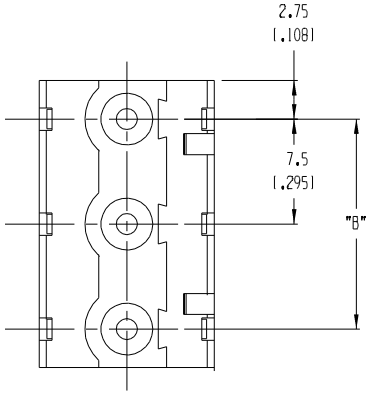

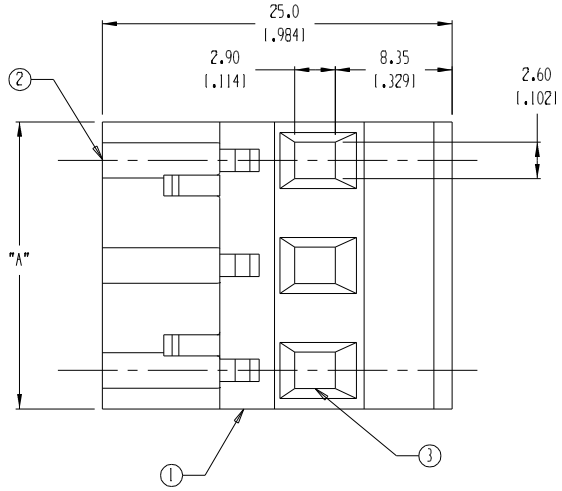

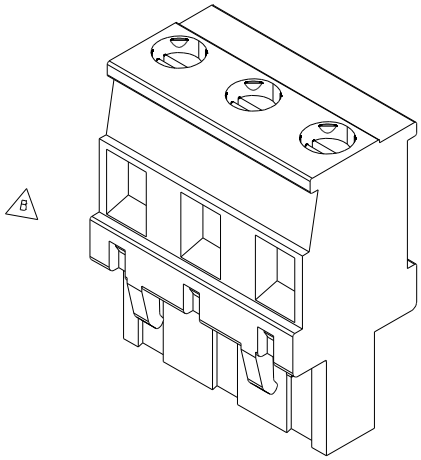

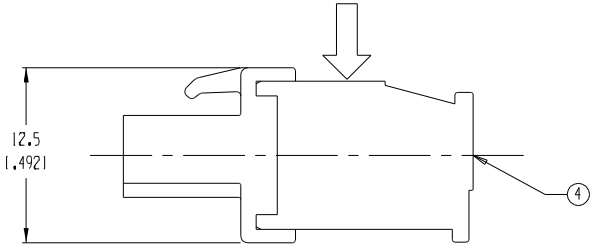

MATERIAL NUMBER	NUMBER OF CIRCUITS "XX"	A		B	
039374-0902	2	13.0	[.51]	7.50	[.295]
039374-0903	3	20.5	[0.81]	15.00	[.591]
039374-0904	4	28.0	[1.10]	22.50	[.886]
039374-0905	5	35.5	[1.40]	30.00	[1.181]
039374-0906	6	43.0	[1.69]	37.50	[1.476]
039374-0907	7	50.5	[1.99]	45.00	[1.772]
039374-0908	8	58.0	[2.28]	52.50	[2.067]
039374-0909	9	65.5	[2.58]	60.00	[2.362]
039374-0910	10	73.0	[2.87]	67.50	[2.657]
039374-0911	11	80.5	[3.17]	75.00	[2.953]
039374-0912	12	88.0	[3.46]	82.50	[3.248]

NOTES:

1. MATERIAL: SEE TABLE
2. FINISHES: SEE TABLE
3. PRODUCT SPECIFICATION: NOT REQUIRED
4. PACKAGING: NOT REQUIRED
5. MATES WITH: 7.5MM HEADER
6. "XX" - REFERS TO THE NUMBER OF CIRCUIT POSITIONS

ITEM	QTY.	DESCRIPTION	MATERIAL	FINISH
4	XX	SCREW	COPPER ALLOY	NICKEL-PLATED
3	XX	CAGE CLAMP	COPPER ALLOY	NICKEL-PLATED
2	XX	TERMINAL	PHOS. BRONZE	TIN-PLATED
1	1	HOUSING	POLYAMIDE	BLACK

EC NO. ECN# 3846
DRWN: CY 09-03-04
CH'K:
APPR:
REV B
DESCRIPTION

QUALITY SYMBOLS
MAJOR
CRITICAL C
SPC S

GENERAL TOLERANCES: (UNLESS SPECIFIED)

	mm	INCH
4 PLACES		±.0015
3 PLACES	±.038	±.005
2 PLACES	±.13	±.01
1 PLACE	±.3	

ANGULAR: ±2°

DRAFT WHERE APPLICABLE MUST REMAIN WITHIN DIMENSIONS

SCALE 3:1
DESIGN UNITS ☐ mm ☒ INCH
THIRD ANGLE PROJECTION

DRAWN BY & DATE W HOWARD 07/21/03
CHECKED BY & DATE R. KEMP 07/23/03
APPROVED BY & DATE P. WALTZ 07/23/03

CAD FILENAME 3709XX
MATERIAL NO. SEE CHART
DRAWING NO. SD-39374-002
SHEET NO. 1 OF 1
SIZE B

PROJECT NO. -
DIMENSIONS: ☒ mm/INCH ☐ INCH/mm ☐ mm ONLY
SHT -
REV -
REVISE ON CAD ONLY

TITLE: 7.5MM VERT PLUG, FRONT WIRE ENTRY

MOLEX INCORPORATED

THIS DRAWING CONTAINS INFORMATION THAT IS PROPRIETARY TO MOLEX INCORPORATED AND SHOULD NOT BE USED WITHOUT WRITTEN PERMISSION.