SD-39374-001

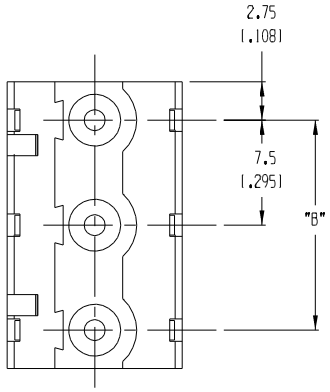

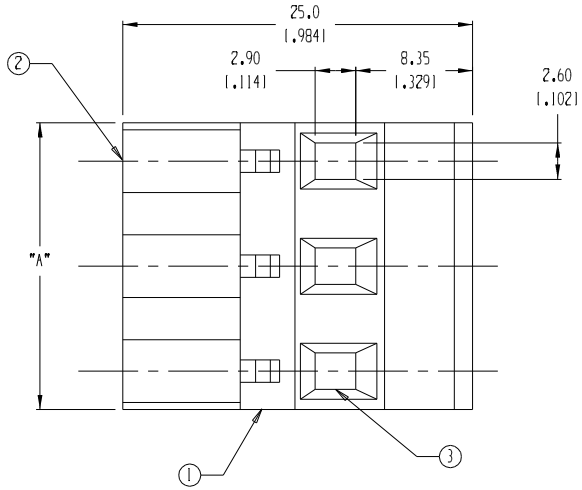

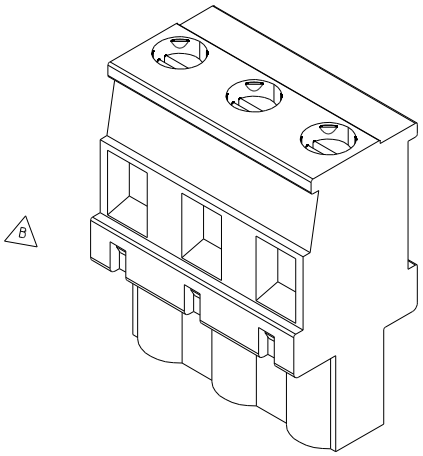

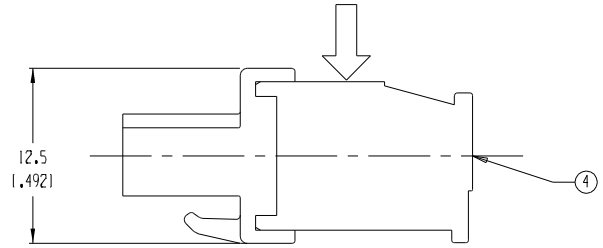

MATERIAL NUMBER	NUMBER OF CIRCUITS "XX"	A	B
039374-0802	2	13.0 [.51]	7.50 [.295]
039374-0803	3	20.5 [0.81]	15.00 [.591]
039374-0804	4	28.0 [1.10]	22.50 [.886]
039374-0805	5	35.5 [1.40]	30.00 [1.181]
039374-0806	6	43.0 [1.69]	37.50 [1.476]
039374-0807	7	50.5 [1.99]	45.00 [1.772]
039374-0808	8	58.0 [2.28]	52.50 [2.067]
039374-0809	9	65.5 [2.58]	60.00 [2.362]
039374-0810	10	73.0 [2.87]	67.50 [2.657]
039374-0811	11	80.5 [3.17]	75.00 [2.953]
039374-0812	12	88.0 [3.46]	82.50 [3.248]

NOTES:

1. MATERIAL: SEE TABLE
2. FINISHES: SEE TABLE
3. PRODUCT SPECIFICATION: NOT REQUIRED
4. PACKAGING: NOT REQUIRED
5. MATES WITH: 7.5MM HEADER
6. "XX" - REFERS TO THE NUMBER OF CIRCUIT POSITIONS

ITEM	QTY.	DESCRIPTION	MATERIAL	FINISH
4	XX	SCREW	COPPER ALLOY	NICKEL-PLATED
3	XX	CAGE CLAMP	COPPER ALLOY	NICKEL-PLATED
2	XX	TERMINAL	PHOS. BRONZE	TIN-PLATED
1	1	HOUSING	POLYAMIDE	BLACK

EC NO. ECN# 3846
DRWN: CY 09-03-04
CH'K:
APPR:
DESCRIPTION
B
REV

QUALITY SYMBOLS
MAJOR
CRITICAL C
SPC S

GENERAL TOLERANCES: (UNLESS SPECIFIED)

	mm	INCH
4 PLACES		±.0015
3 PLACES	±.038	±.005
2 PLACES	±.13	±.01
1 PLACE	±.3	
ANGULAR:		±2°

DRAFT WHERE APPLICABLE MUST REMAIN WITHIN DIMENSIONS

SCALE 3:1
DESIGN UNITS ☐ mm ☒ INCH
THIRD ANGLE PROJECTION
DRAWN BY & DATE W HOWARD 07/21/03
CHECKED BY & DATE R. KEMP 07/23/03
APPROVED BY & DATE P. WALTZ 07/23/03
CAD FILENAME 3708XX
MATERIAL NO. SEE CHART
DRAWING NO. SD-39374-001
SHEET NO. 1 OF 1
SIZE B

PROJECT NO. -
DIMENSIONS: ☒ mm/INCH ☐ INCH/mm ☐ mm ONLY
SHT -
REV -
REVISE ON CAD ONLY

TITLE:
7.5MM VERT PLUG,
REAR WIRE ENTRY

MOLEX INCORPORATED

THIS DRAWING CONTAINS INFORMATION THAT IS PROPRIETARY TO MOLEX INCORPORATED AND SHOULD NOT BE USED WITHOUT WRITTEN PERMISSION.