SD-39373-001

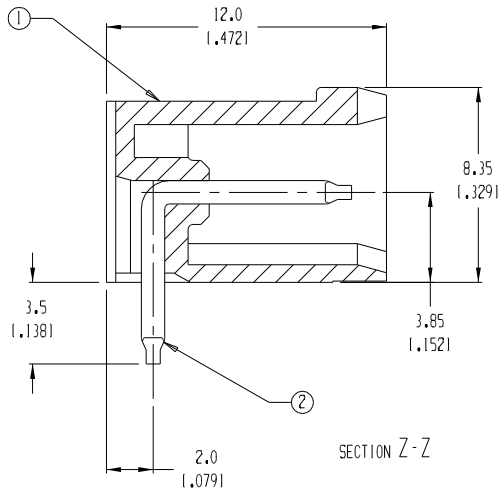

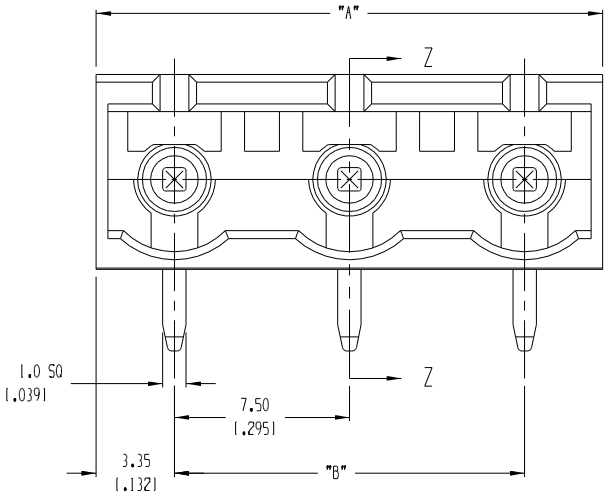

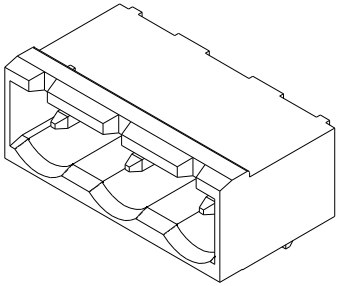

B AUX. VIEW
SCALE 3:1

MATERIAL NUMBER	NUMBER OF CIRCUITS "XX"	A	B
039373-0002	2	14.2 [0.56]	7.50 [.295]
039373-0003	3	21.7 [0.85]	15.00 [.591]
039373-0004	4	29.2 [1.15]	22.50 [.886]
039373-0005	5	36.7 [1.44]	30.00 [1.181]
039373-0006	6	44.2 [1.74]	37.50 [1.476]
039373-0007	7	51.7 [2.04]	45.00 [1.772]
039373-0008	8	59.2 [2.33]	52.50 [2.067]
039373-0009	9	66.7 [2.63]	60.00 [2.362]
039373-0010	10	74.2 [2.92]	67.50 [2.657]
039373-0011	11	81.7 [3.22]	75.00 [2.953]
039373-0012	12	89.2 [3.51]	82.50 [3.248]

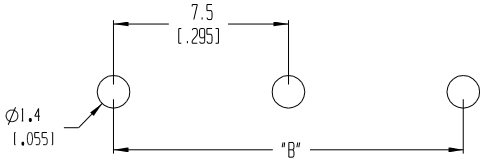

PTH PATTERN
RECOMMENDED

NOTES:

1. MATERIAL: SEE TABLE
2. FINISHES: SEE TABLE
3. PRODUCT SPECIFICATION: NOT REQUIRED
4. PACKAGING: NOT REQUIRED
5. MATES WITH: 7MM PLUG
6. "XX" - REFERS TO the NUMBER OF CIRCUIT POSITIONS

ITEM	QTY.	DESCRIPTION	MATERIAL	FINISH
-	-	-	-	-
-	-	-	-	-
2	XX	PIN	PHOS. BRONZE	TIN-PLATED
1	1	HOUSING	POLYMIDE	BLACK

EC NO. ECN# 3846
DRWN: CY 09-03-04
CH'K:
APPR:
REV B
DESCRIPTION

QUALITY SYMBOLS
MAJOR
CRITICAL C
SPC S

GENERAL TOLERANCES: (UNLESS SPECIFIED)

	mm	INCH
4 PLACES		±.0015
3 PLACES	±.038	±.005
2 PLACES	±.13	±.01
1 PLACE	±.3	
ANGULAR: ±2°		

DRAFT WHERE APPLICABLE MUST REMAIN WITHIN DIMENSIONS

SCALE 5:1
DESIGN UNITS ☐ mm ☒ INCH
THIRD ANGLE PROJECTION

DRAWN BY & DATE W HOWARD 07/21/03
CHECKED BY & DATE R. KEMP 07/23/03
APPROVED BY & DATE P. WALTZ 07/23/03
CAD FILENAME 3719XX

PROJECT NO. - | - | -
DIMENSIONS: ☒ mm/INCH ☐ INCH/mm ☐ mm ONLY | SHT | REV
REVISE ON CAD ONLY

TITLE: 7.5MM RA, HEADER

MOLEX INCORPORATED

MATERIAL NO. SEE CHART
DRAWING NO. SD-39373-001
SHEET NO. 1 OF 1
SIZE B

THIS DRAWING CONTAINS INFORMATION THAT IS PROPRIETARY TO MOLEX INCORPORATED AND SHOULD NOT BE USED WITHOUT WRITTEN PERMISSION.