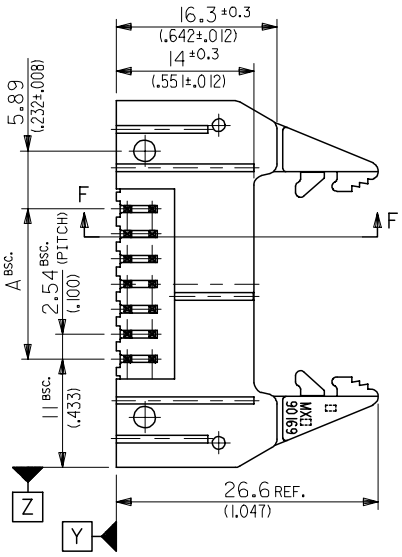

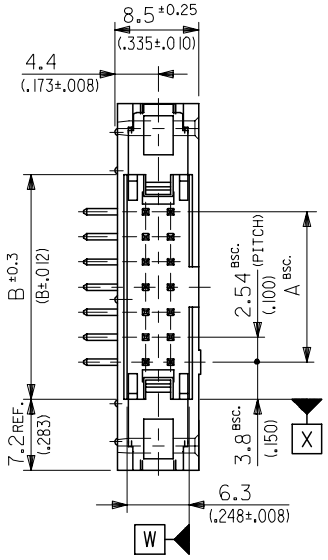

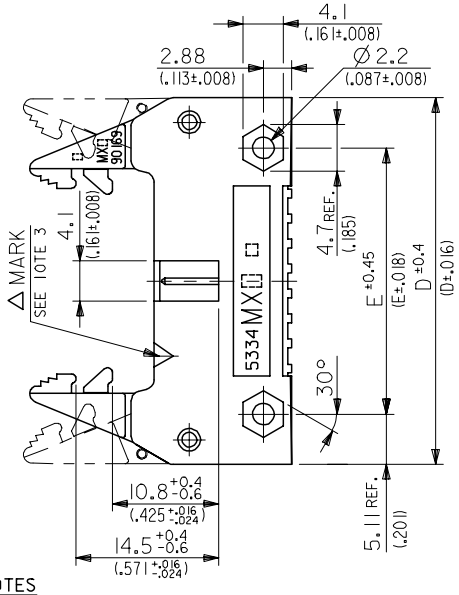

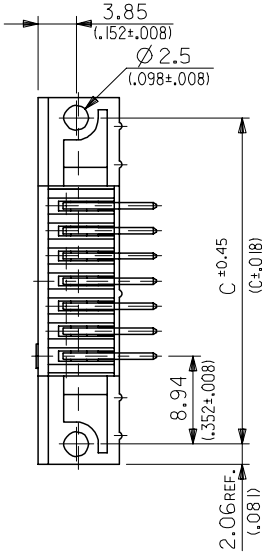

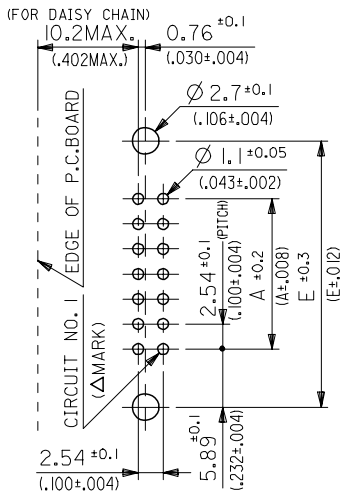

RECOMMENDED P.C.BOARD HOLE LAYOUT
(PARTS MOUNTING SIDE)

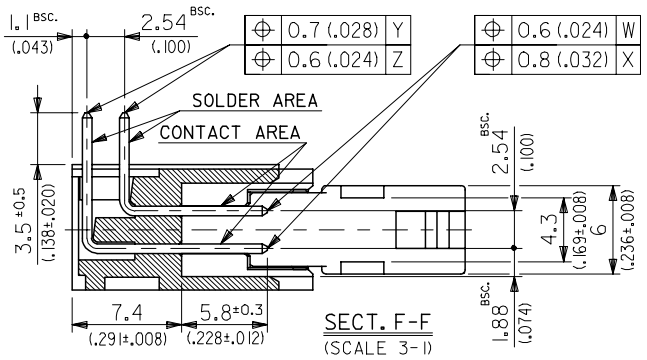

SECT. F-F
(SCALE 3-1)

NOTES

1. MATERIAL
   - HEADER & EJECT LEVER : G.F. 15% PBTP (UL94V-0)
   - PINS : BRASS, SIZE--- □0.635(.025 SQ.)
   - SPRING PIN : STEEL
2. MATES WITH MOLEX CONNECTOR SERIES OF 5320.
3. LEGEND

5578 - N B * - *

- BASE NUMBER
- CIRCUIT SIZE
- WITH EJECT LEVER
- PLATING CODE OF PIN
- MATERIAL COLOR
  - BLANK : BLACK
  - GY : GREY

	CODE:*	△ MARK COLOR	CONTACT AREA	SOLDER AREA	UNDER PLATE
LEAD-FREE	G1	WHITE	GOLD 0.1μm(.000004)MIN.		NICKEL 1μm(.00004)MIN.
LEAD-FREE	G2	ORANGE	GOLD 0.76μm(.00003)MIN.		
LEAD-FREE	G3	GREEN	GOLD 0.25μm(.00001)MIN.		
	GS1	YELLOW	GOLD 0.1μm(.000004)MIN.	TIN-LEAD 3μm(.00012)MIN.	
	GS2	BROWN	GOLD 0.76μm(.00003)MIN.		
	GS3	BLUE	GOLD 0.25μm(.00001)MIN.		
LEAD-FREE	T2	BLACK	TIN 1μm(.00004)MIN.		NICKEL 0.5μm(.00002)MIN.
LEAD-FREE	GS17F	YELLOW	GOLD 0.1μm(.000004)MIN.	TIN 1μm(.00004)MIN.	NICKEL 1μm(.00004)MIN.
LEAD-FREE	GS27F	BROWN	GOLD 0.76μm(.00003)MIN.		
LEAD-FREE	GS37F	BLUE	GOLD 0.25μm(.00001)MIN.		

NO. OF CKTS.	DIM. A	DIM. B	DIM. C	DIM. D	DIM. E
64	78.74 (3.100)	86.34 (3.400)	96.62 (3.804)	100.74 (3.966)	90.52 (3.564)
60	73.66 (2.900)	81.26 (3.200)	91.54 (3.604)	95.66 (3.766)	85.44 (3.364)
50	60.96 (2.400)	68.56 (2.700)	78.84 (3.104)	82.96 (3.266)	72.74 (2.864)
40	48.26 (1.900)	55.86 (2.200)	66.14 (2.604)	70.26 (2.766)	60.04 (2.364)
34	40.64 (1.600)	48.24 (1.900)	58.52 (2.304)	62.64 (2.466)	52.42 (2.064)
30	35.56 (1.400)	43.16 (1.700)	53.44 (2.104)	57.56 (2.266)	47.34 (1.864)
26	30.48 (1.200)	38.08 (1.500)	48.36 (1.904)	52.48 (2.066)	42.26 (1.664)
20	22.86 (.900)	30.46 (1.200)	40.74 (1.604)	44.86 (1.766)	34.64 (1.364)
16	17.78 (.700)	25.38 (1.000)	35.66 (1.404)	39.78 (1.566)	29.56 (1.164)
14	15.24 (.600)	22.84 (.900)	33.12 (1.304)	37.24 (1.466)	27.02 (1.064)
10	10.16 (.400)	17.76 (.700)	28.04 (1.104)	32.16 (1.266)	21.94 (.864)

REVISED
EC NO: J2006-0712 2005/10/03
DRWN:AYANAGIMOTO 2005/10/06
CHKD:MTANAKA 2005/10/14
APPR:NUKITA
DESCRIPTION
G REV

GENERAL TOLERANCES (UNLESS SPECIFIED)

10 UNDER	±0.2
10 OVER 30 UNDER	±0.25
30 OVER	±0.3
ANGULAR ±3 °	

DRAFT WHERE APPLICABLE MUST REMAIN WITHIN DIMENSIONS

DIMENSION STYLE: MM ONLY
SCALE: 2:1
DESIGN UNITS: METRIC
THIRD ANGLE PROJECTION

DRAWN BY: H.HIRAMOTO DATE: 1989/12/04
CHECKED BY DATE
APPROVED BY DATE

TITLE: QIK FLECS HEADER ASS'Y R.A. WITH DUAL FUNCTION EJECT LEVERS

molex MOLEX INCORPORATED

MATERIAL NO.: SEE SHEET 2 OF 2
DOCUMENT NO.: SD-5578-001
SHEET NO.: 1 OF 2
SIZE: A3

THIS DRAWING CONTAINS INFORMATION THAT IS PROPRIETARY TO MOLEX INCORPORATED AND SHOULD NOT BE USED WITHOUT WRITTEN PERMISSION

				39-53-7643	5578-64BGS37F-GY	39-53-7642	5578-64BGS27F-GY	39-53-7641	5578-64BGS17F-GY	39-53-7640	5578-64BGS37F	39-53-6649	5578-64BGS27F	39-53-6648	5578-64BGS17F	64
				-7603	-60BGS37F-GY	-7602	-60BGS27F-GY	-7601	-60BGS17F-GY	-7600	-60BGS37F	-6609	-60BGS27F	-6608	-60BGS17F	60
				-7503	-50BGS37F-GY	-7502	-50BGS27F-GY	-7501	-50BGS17F-GY	-7500	-50BGS37F	-6509	-50BGS27F	-6508	-50BGS17F	50
				-7403	-40BGS37F-GY	-7402	-40BGS27F-GY	-7401	-40BGS17F-GY	-7400	-40BGS37F	-6409	-40BGS27F	-6408	-40BGS17F	40
				-7343	-34BGS37F-GY	-7342	-34BGS27F-GY	-7341	-34BGS17F-GY	-7340	-34BGS37F	-6349	-34BGS27F	-6348	-34BGS17F	34
				-7303	-30BGS37F-GY	-7302	-30BGS27F-GY	-7301	-30BGS17F-GY	-7300	-30BGS37F	-6309	-30BGS27F	-6308	-30BGS17F	30
				-7263	-26BGS37F-GY	-7262	-26BGS27F-GY	-7261	-26BGS17F-GY	-7260	-26BGS37F	-6269	-26BGS27F	-6268	-26BGS17F	26
				-7203	-20BGS37F-GY	-7202	-20BGS27F-GY	-7201	-20BGS17F-GY	-7200	-20BGS37F	-6209	-20BGS27F	-6208	-20BGS17F	20
				-7163	-16BGS37F-GY	-7162	-16BGS27F-GY	-7161	-16BGS17F-GY	-7160	-16BGS37F	-6169	-16BGS27F	-6168	-16BGS17F	16
				-7143	-14BGS37F-GY	-7142	-14BGS27F-GY	-7141	-14BGS17F-GY	-7140	-14BGS37F	-6149	-14BGS27F	-6148	-14BGS17F	14
				39-53-7103	5578-10BGS37F-GY	39-53-7102	5578-10BGS27F-GY	39-53-7101	5578-10BGS17F-GY	39-53-7100	5578-10BGS37F	39-53-6109	5578-10BGS27F	39-53-6108	5578-10BGS17F	10
				EDP NO.	ENG. NO.	EDP NO.	ENG. NO.	EDP NO.	ENG. NO.	EDP NO.	ENG. NO.	EDP NO.	ENG. NO.	EDP NO.	ENG. NO.	NO. OF CKTS.
				5578-NBGS37F-GY -LEAD FREE-		5578-NBGS27F-GY -LEAD FREE-		5578-NBGS17F-GY -LEAD FREE-		5578-NBGS37F -LEAD FREE-		5578-NBGS27F -LEAD FREE-		5578-NBGS17F -LEAD FREE-		
				39-27-3644	5578-64BGS3-GY	39-27-3643	5578-64BGS2-GY	39-27-3642	5578-64BGS1-GY	39-27-1648	5578-64BGS3	39-27-1647	5578-64BGS2	39-27-1646	5578-64BGS1	64
				-3604	-60BGS3-GY	-3603	-60BGS2-GY	-3602	-60BGS1-GY	-1608	-60BGS3	-1607	-60BGS2	-1606	-60BGS1	60
39-28-5506	5578-50BT2			-3504	-50BGS3-GY	-3503	-50BGS2-GY	-3502	-50BGS1-GY	-1508	-50BGS3	-1507	-50BGS2	-1506	-50BGS1	50
-5406	-40BT2			-3404	-40BGS3-GY	-3403	-40BGS2-GY	-3402	-40BGS1-GY	-1408	-40BGS3	-1407	-40BGS2	-1406	-40BGS1	40
-5346	-34BT2			-3344	-34BGS3-GY	-3343	-34BGS2-GY	-3342	-34BGS1-GY	-1348	-34BGS3	-1347	-34BGS2	-1346	-34BGS1	34
-5306	-30BT2			-3304	-30BGS3-GY	-3303	-30BGS2-GY	-3302	-30BGS1-GY	-1308	-30BGS3	-1307	-30BGS2	-1306	-30BGS1	30
-5266	-26BT2			-3264	-26BGS3-GY	-3263	-26BGS2-GY	-3262	-26BGS1-GY	-1268	-26BGS3	-1267	-26BGS2	-1266	-26BGS1	26
-5206	-20BT2			-3204	-20BGS3-GY	-3203	-20BGS2-GY	-3202	-20BGS1-GY	-1208	-20BGS3	-1207	-20BGS2	-1206	-20BGS1	20
-5166	-16BT2			-3164	-16BGS3-GY	-3163	-16BGS2-GY	-3162	-16BGS1-GY	-1168	-16BGS3	-1167	-16BGS2	-1166	-16BGS1	16
-5146	-14BT2			-3144	-14BGS3-GY	-3143	-14BGS2-GY	-3142	-14BGS1-GY	-1148	-14BGS3	-1147	-14BGS2	-1146	-14BGS1	14
39-28-5106	5578-10BT2			39-27-3104	5578-10BGS3-GY	39-27-3103	5578-10BGS2-GY	39-27-3102	5578-10BGS1-GY	39-27-1108	5578-10BGS3	39-27-1107	5578-10BGS2	39-27-1106	5578-10BGS1	10
EDP NO.	ENG. NO.			EDP NO.	ENG. NO.	EDP NO.	ENG. NO.	EDP NO.	ENG. NO.	EDP NO.	ENG. NO.	EDP NO.	ENG. NO.	EDP NO.	ENG. NO.	NO. OF CKTS.
5578-NBT2 -LEAD FREE-				5578-NBGS3-GY		5578-NBGS2-GY		5578-NBGS1-GY		5578-NBGS3		5578-NBGS2		5578-NBGS1		

REV	DESCRIPTION
G	REVISED EC NO: J2006-0712 DRWN:AYANAGIMOTO 2005/10/03 CHKD:MTANAKA 2005/10/06 APPR:NUKITA 2005/10/14

GENERAL TOLERANCES (UNLESS SPECIFIED)

10 UNDER	±0.2
10 OVER 30 UNDER	±0.25
30 OVER	±0.3
ANGULAR ±3 °	

DRAFT WHERE APPLICABLE MUST REMAIN WITHIN DIMENSIONS

DIMENSION STYLE: MM ONLY
SCALE: ---
DESIGN UNITS: METRIC
THIRD ANGLE PROJECTION

DRAWN BY: H.HIRAMOTO DATE: 1989/12/04
CHECKED BY DATE
APPROVED BY DATE
MATERIAL NO.: SEE CHART

TITLE: QIK FLECS HEADER ASS'Y R.A. WITH DUAL FUNCTION EJECT LEVER

molex MOLEX INCORPORATED

DOCUMENT NO.: SD-5578-001
SHEET NO.: 2 OF 2
SIZE: A3

THIS DRAWING CONTAINS INFORMATION THAT IS PROPRIETARY TO MOLEX INCORPORATED AND SHOULD NOT BE USED WITHOUT WRITTEN PERMISSION