DWG. NO. SD-35313-002

SIMILAR ITEM 35313-**7*

PROJECT NO.

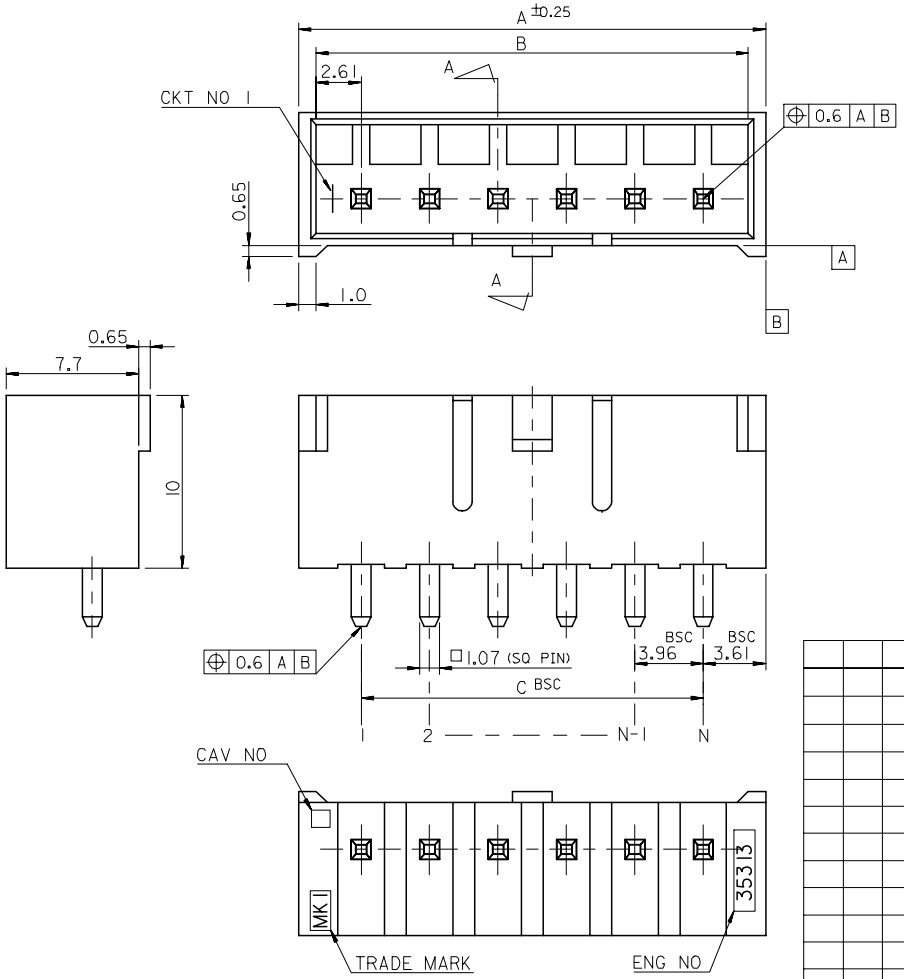

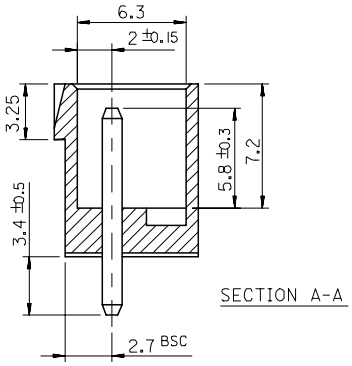

SECTION A-A

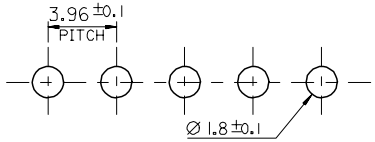

P.C.BOARD LAYOUT
THK. : 1.6t

12	11	10	9	8	7	6	5	4	3	2	1	C	B	A	MATERIAL NO.	ENG NO.	CKT.	N
				O	X	O	X	O	X	O	O	27.72	32.94	34.94	35313145*	35313-145*	5	8
						O	X	O	X	O	O	19.8	25.02	27.02	35313135*	35313-135*	4	6
					O	O	O	O	X	O	O	15.84	28.98	30.98	35313125*	35313-125*	6	7
			O	O	O	O	O	X	O	X	O	31.68	36.90	38.9	35313115*	35313-115*	7	9
					X	X	O	X	O	X	O	15.84	28.98	30.98	35313105*	35313-105*	3	7
				O	X	O	X	O	O	O	O	27.72	32.94	34.94	35313095*	35313-095*	6	8
				O	O	X	O	X	O	X	O	27.72	32.94	34.94	35313085*	35313-085*	5	8
				O	O	O	O	O	X	O	O	27.72	32.94	34.94	35313075*	35313-075*	7	8
				O	O	O	O	X	O	X	O	27.72	32.94	34.94	35313065*	35313-065*	6	8
						O	O	X	O	X	O	19.8	25.02	27.02	35313055*	35313-055*	4	6
							O	O	X	O	O	15.84	21.06	23.06	35313045*	35313-045*	4	5
								O	X	O	O	11.88	17.1	19.1	35313035*	35313-035*	3	4
								O	X	X	O	11.88	17.1	19.1	35313025*	35313-025*	2	4

PIN LOCATION (X : VOID)

NOTE

1. MATERIAL : WAFER : NYLON66, GLASS FILLED 20% UL94V-0
   PIN : BRASS, TIN PLATED

2. LEGEND
   35313-** 5 *
   - COLOR : 0 - NATURAL
     1 - BLACK
     2 - RED
     3 - YELLOW
     4 - BLUE
   - CONSECUTIVE NO.(02,03,04...)

3. THIS PRODUCT SHALL BE COMPLIED WITH RoHS COMPATIBLE(LEAD FREE SOLDERABILITY)

DO NOT SCALE DRAWING
DIMENSION IN METRIC

REV	DESCRIPTION
B	REVISED EC NO. KOR2006-0105 DRWN: K.S.KIM 060323 CHK: K.S.KIM APPR: Y.Soo.KIM

QUALITY SYMBOLS: MAJOR ▼ = ; CRITICAL (C) =

GENERAL TOLERANCES: (UNLESS SPECIFIED)

	mm	INCH
4 PLACES	±0.	±.
3 PLACES	±0.	±.
2 PLACES	±0.	±.
1 PLACE	±0.2	±.
ANGULAR: ± 2°		

DRAFT WHERE APPLICABLE MUST REMAIN WITHIN DIMENSIONS

SCALE 3.5-1 | DESIGN UNITS ☒mm ☐INCH | THIRD ANGLE PROJECTION | DIMENSIONS: ☐ mm/INCH ☐ INCH/mm ☒ mm ONLY | SHT | REV | REVISE ON CAD ONLY

DRAWN BY & DATE: H.S.SHIN
CHECKED BY & DATE: Y.Soo.KIM
APPROVED BY & DATE: C.W.LEE
CAD FILENAME: —

TITLE: 3.96 PITCH W/B CONN. WAFER ASS'Y (WITH LOCK)

molex MOLEX INCORPORATED

MATERIAL NO.: SEE TABLE | DRAWING NO.: SD-35313-002 | SHEET NO.: 1 of 1 | SIZE: B

THIS DRAWING CONTAINS INFORMATION THAT IS PROPRIETARY TO MOLEX INCORPORATED AND SHOULD NOT BE USED WITHOUT WRITTEN PERMISSION.

MX-A3