molex
one company › a world of innovation

This document was generated on 01/25/2013

PLEASE CHECK WWW.MOLEX.COM FOR LATEST PART INFORMATION

Part Number: 35072-9902

Status: Active

Description: MP-Lock™ Quick Disconnect, Female, for 10-14 AWG (5.26-2.08mm²), Metal Strip, Tab 6.35 x 0.81mm, Pre-Tin Plated

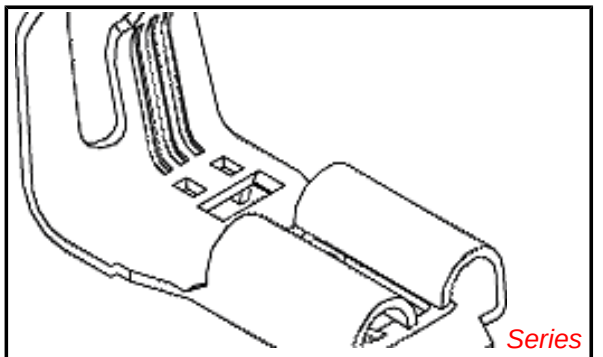

image - Reference only

Documents:
Drawing (PDF)
Product Specification PS-35960-001 (PDF)
Packaging Specification PK-35072-001 (PDF)
RoHS Certificate of Compliance (PDF)

Agency Certification

CSA	LR95446
UL	E92853

General

Product Family	Quick Disconnects
Series	35072
Crimp Quality Equipment	Yes
Product Name	MP-Lock™
Type	Quick Disconnect
UPC	800753340558

Physical

Barrel Type	Open
Gender	Female
Glow-Wire Compliant	No
Insulation	None
Lock to Mating Part	Yes
Material - Metal	Brass
Material - Plating Mating	Tin
Material - Plating Termination	Tin
Net Weight	0.946/g
Orientation	Straight
Packaging Type	Reel
Plating min - Mating	0.813µm
Plating min - Termination	0.813µm
Polarized to Mating Part	Yes
Tab Thickness	0.81mm
Tab Width	6.35mm
Temperature Range - Operating	-40°C to +105°C
Termination Interface: Style	Crimp or Compression
Wire Insulation Diameter	3.00-5.10mm
Wire Size AWG	10, 12, 14
Wire Size mm²	2.08 - 5.26

Electrical

Voltage - Maximum	300V

Material Info

Reference - Drawing Numbers

Packaging Specification	PK-35072-001
Product Specification	PS-35960-001
Sales Drawing	SD-35072-9702

EU RoHS
ELV and RoHS Compliant
REACH SVHC
Contains SVHC: No
Low-Halogen Status
Low-Halogen

China RoHS

Need more information on product environmental compliance?

Email productcompliance@molex.com
For a multiple part number RoHS Certificate of Compliance, click here

Please visit the Contact Us section for any non-product compliance questions.

Search Parts in this Series
35072Series

Use With
35196 , 35959

Application Tooling | **FAQ**
Tooling specifications and manuals are found by selecting the products below. Crimp Height Specifications are then contained in the Application Tooling Specification document.

Global

Description	Product #
Mini-Mac™ Applicator for Terminals, Rear-Feed	0638025200
Extraction Tool for Quick Disconnect	0638135500
Hand Tool for .250" Crimp Terminals	0638196500

Japan

Description	Product #
End-Feed Applicator	0573713100

This document was generated on 01/25/2013
PLEASE CHECK WWW.MOLEX.COM FOR LATEST PART INFORMATION