Part Number: 34986-1959

Status: Active

Overview: MX150™ Sealed Connector System

Description: MX150™ Hybrid Sealed Male Connector, Dual Row, 16 Circuits, Polarization C, Dark Gray with Connector Position Assurance

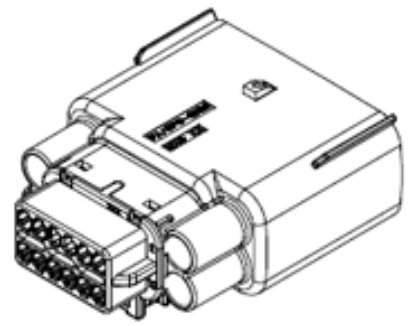

Series

image - Reference only

Documents:

Drawing (PDF)
Product Specification PS-33476-000 (PDF)
Application Specification AS-33472-100 (PDF)
RoHS Certificate of Compliance (PDF)

General

Product Family	Crimp Housings
Series	34986
Application	Power, Wire-to-Wire
Comments	With Connector Position Assurance (CPA)
More Detailed Tech Information	http://ewcap.uscarteams.org
Overview	MX150™ Sealed Connector System
Product Name	MX150™
UPC	887191420714

Physical

Circuits (maximum)	16
Circuits Detail	16
Color - Resin	Gray (Dark), Natural
Gender	Male
Glow-Wire Compliant	No
Keying to Mating Part	Yes
Lock to Mating Part	Yes
Material - Resin	Modified Polystyrene Alloy, Polyester
Net Weight	23.655/g
Number of Rows	2
Packaging Type	Bag
Panel Mount	No
Pitch - Mating Interface	3.50mm
Polarized to Mating Part	Yes
Stackable	No
Temperature Range - Operating	-40°C to +125°C

Electrical

Current - Maximum per Contact	22A

Material Info

Reference - Drawing Numbers

Application Specification	AS-33472-100
Product Specification	PS-33476-000
Sales Drawing	SD-34986-8001

EU RoHS
ELV and RoHS Compliant
REACH SVHC
Not Reviewed
Low-Halogen Status
Low-Halogen

China RoHS

Need more information on product environmental compliance?

Email productcompliance@molex.com
For a multiple part number RoHS Certificate of Compliance, click here

Please visit the Contact Us section for any non-product compliance questions.

Search Parts in this Series
34986Series

Mates With
33476 MX150™ Hybrid Sealed Female Connector

Use With
31296 MX150™ Male Shorting Bar, 33000 MX150™ Male Terminal