KILO INTERNATIONAL

Home

Dials

Knobs

Distributors

Contact Us

Specials

We've Moved !

Please note our new info.

contact:

KILO INTERNATIONAL

492 W. 1200 No., Ste 2
Springville, Utah
USA

Tel 801.489.9520

Fax 801.489.9041

3400 Series: 7/8" Turns-counting Dial; **20 turn calibration**. Anodized aluminum case with plastic scales and knob. This is our most economical turns-counting dial. Made with the same commitment to quality, this dials boasts features from our more expensive series, yet is available for much less. Positive action brake is located on the side. Turns-counting digit appears in the window as the dial is rotated. Available with clear or black base, knob and scales are black with white markings.

3400 SERIES

3400 Mechanical Specifications:

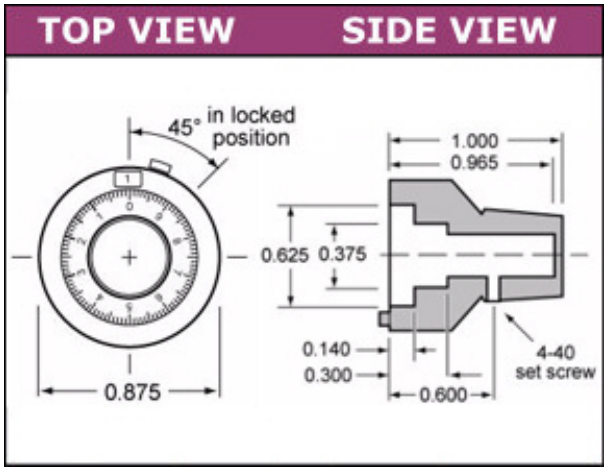

- Only Available in Models **#3412** (black case with 1/4" shaft hole and locking brake) and **#3462** (Clear case with 1/4" shaft hole and locking brake)
- Shaft Extension beyond face of panel: .620" Min. / .960" Max
- Pot. Bushing Extension beyond face of panel: .125" Min / .297" Max.
- Maximum Weight: .35oz / 9.5 gram

Copyright ©2007 Kilo International

KILOINTERNATIONAL.COM KILOINTERNATIONAL.COM KILOINTERNATIONAL.COM KILOINTERNATIONAL.COM KILOINTERNATIONAL.COM KILOINTERNATIONAL.COM