used for: D-SUB COMBINATION

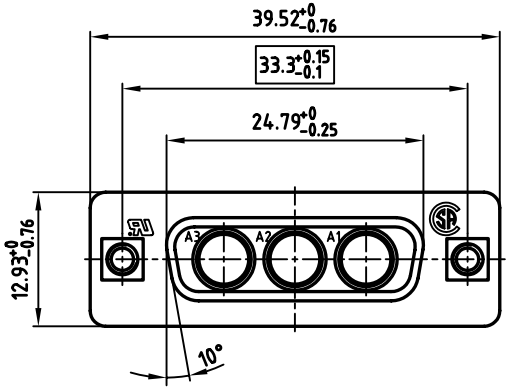

5:1

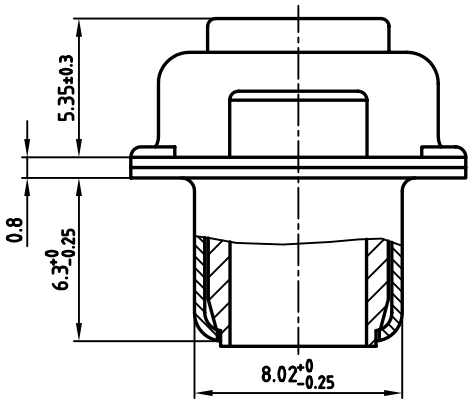

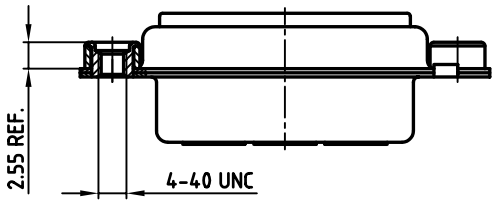

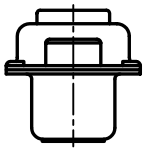

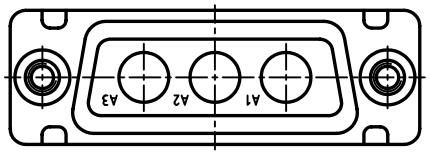

NOTES:

1. METALSHELLS: STEEL; min. 320µ" TIN
2. INSULATORS: PBT GF UL 94 V-0, GREEN
3. THREADED INSERT: COPPER ALLOY; min. 200µ" TIN over 80µ" NICKEL
4. COLLAR: COPPER ALLOY; min. 200µ" TIN over 80µ" NICKEL
5. MAXIMUM TORQUE VALUE FOR THREAD: 6" LBS
6. [ ] = CRITICAL DIMENSION: SPC

Directive 2002/95/EC „RoHS" Compliant

THIS DRAWING MAY NOT BE COPIED OR REPRODUCED IN ANY WAY, AND MAY NOT BE PASSED ON TO A THIRD PARTY WITHOUT WRITTEN PERMISSION. OWNERSHIP AND COPYRIGHT OF CONEC GmbH

DO NOT ALTER CAD DRAWING BY HAND

rev.	description	date	name

tolerance

2001	date	name
drawn	26.09.	E. Mickenbecker
appd.	26.09.	J. Parei
norm		
d-old		

CONEC®

scale: 2:1 (5:1)
material: SEE NOTES

title:
D-SUB COMBINATION FEMALE
3W3S
with threaded insert

dwg no: 13K1A348A
AutoCAD 2000
DIN-A 3
sh: 1/1

part no: 3003W3SXX99A30X