RF 19 - Signal indicator, ½ x 1-module

3.14.002.063/0000

For more information, see LEDs.

General information	
Color of lens	yellow
Recommended key grid	23/x mm

Dimensions	
Length	19.05 mm
Width	9.5 mm
Overall height	9.15 mm

Mechanical design	
Mounting	THT soldering in PCB
Illumination	fully illuminated 1 LED
LED color	yellow
LED type	2 mm

Other specifications	
Ambient temp. operating min.	-25 °C
Ambient temp. operating max.	+70 °C
Environmental restistance	acc. to IEC 60068-2-14, -30, -33 and -78
Solderability / solder heat resistance	according to DIN EN 60068-2-20
Wave soldering	260 °C max.
Manual soldering	350 °C / 5 sec. max.
ROHS compliant	yes
REACH compliant	yes

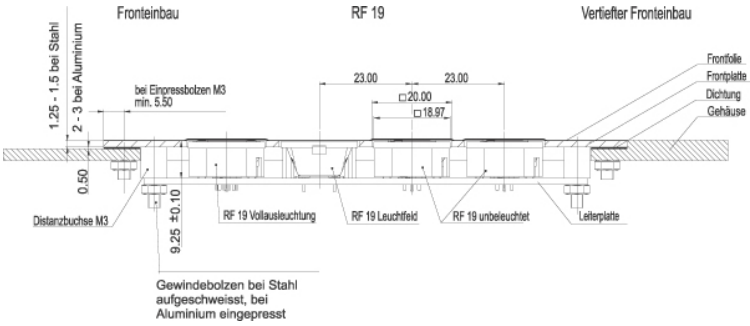

Technical data are approximate and intended solely for general orientation in the selection of a product.
Subject to modifications and errors. Images and other graphics may only be similar.
For more information, refer to www.rafi.de chapter Imprint / Data Protection.

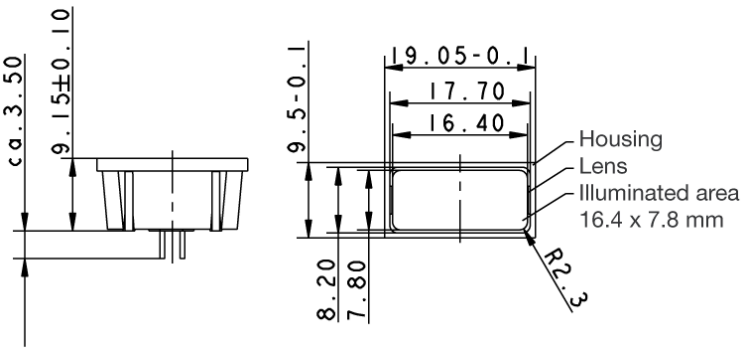

0,5 x 2-module, yellow

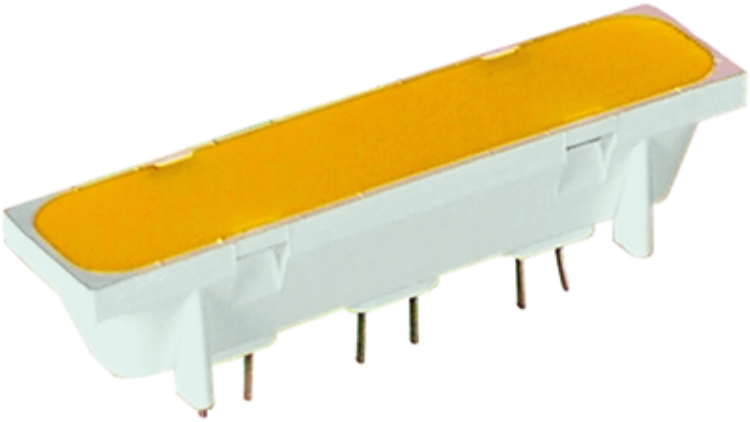

Technical data are approximate and intended solely for general orientation in the selection of a product.
Subject to modifications and errors. Images and other graphics may only be similar.
For more information, refer to www.rafi.de chapter Imprint / Data Protection.