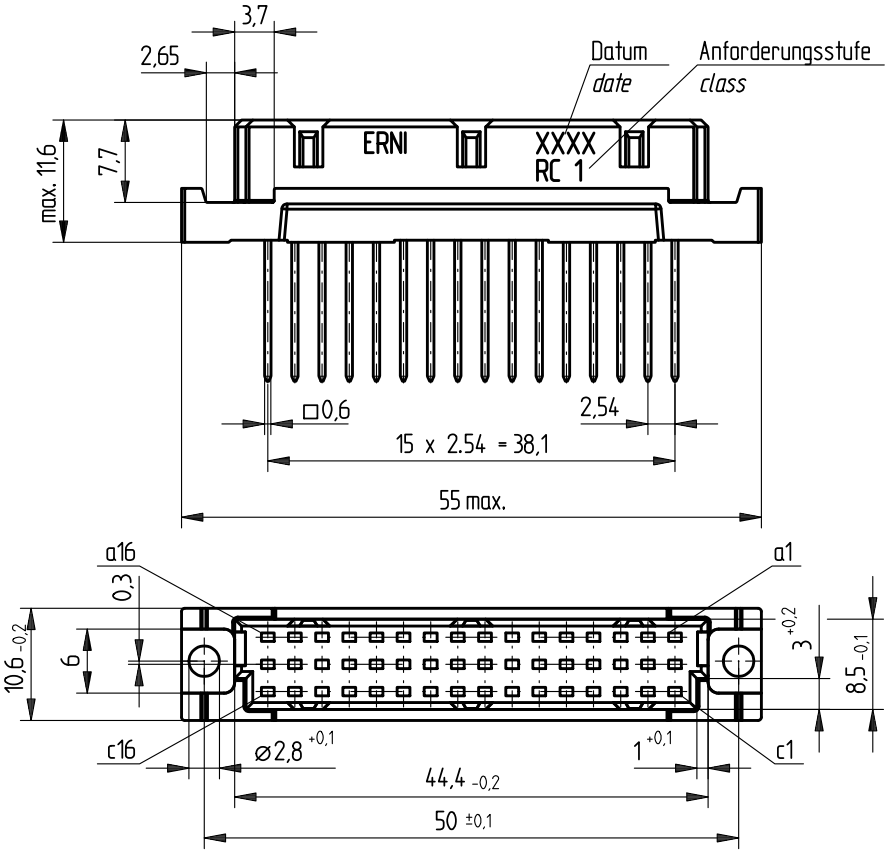


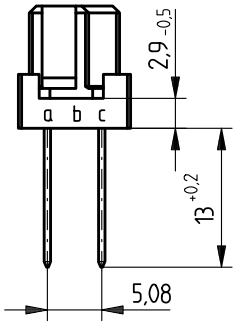


## Bestückungsplan / *contact layout*

■ bestückt / *assemble*

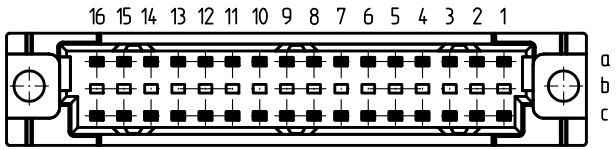


## Leiterplatten-Lochbild / *PCB drillhole pattern*

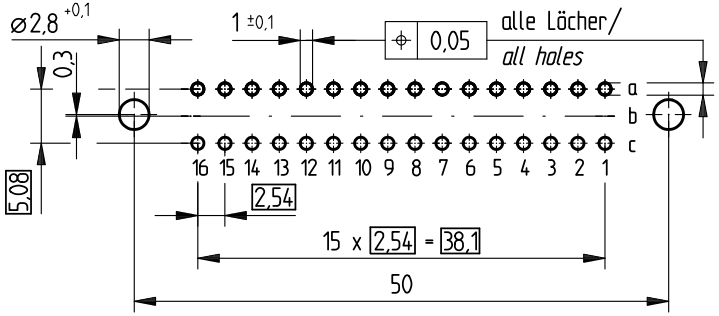


Anschluß 0,6 x 0,6 mm / *terminal 0,6 x 0,6 mm*

Isolierwerkstoff / *housing material :* PBT GF30

Bauart 7 / *type 7*

Anforderungsstufe 1 = 500 Steckzyklen / *performance class 1 = 500 mating cycles*

Fehlende Maße und Angaben nach IEC 60 603-2 / DIN EN 60 603-2

*Missing information and dimensions per IEC 60 603-2*

Bedruckung siehe Zeichnung 294875

*Marking see drawing 294875*

| | | | |
|---|---|---|---|
| Information: | Tolerances | All Dimensions in mm | Scale 2:1 |
| All rights reserved. Only for information. To insure that this is the latest version of this drawing, please contact one of the ERNI companies before using. | Subject to modification without prior notice. Drawing will not be updated. | | Designation: Federleiste C/2, 32 / *Fem. Connector C/2, 32* |
| | ERNI www.ERNI.com | | 284934 — 1 |
| Index | Date | H:00065413.SZA | STVC/2 |

Consider protection memo from DIN 34