Data Sheet | Item Number: 2636-3103/020-000

PCB terminal block; 16 mm²; Pin spacing 10 mm; 3-pole; Push-in CAGE CLAMP®; 16,00 mm²; gray

https://www.wago.com/2636-3103/020-000

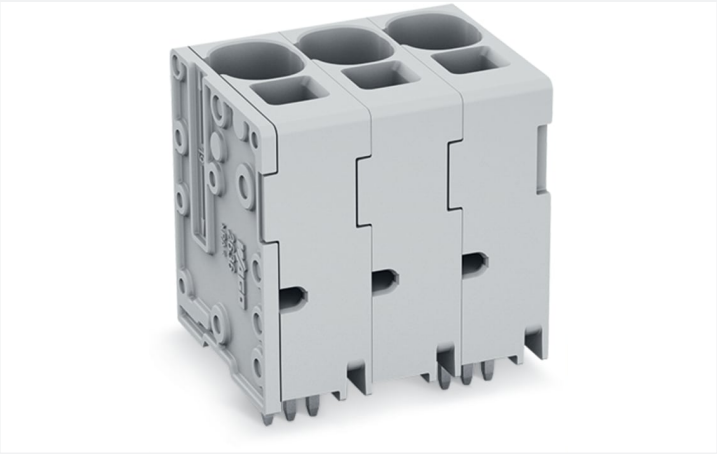

Color: gray

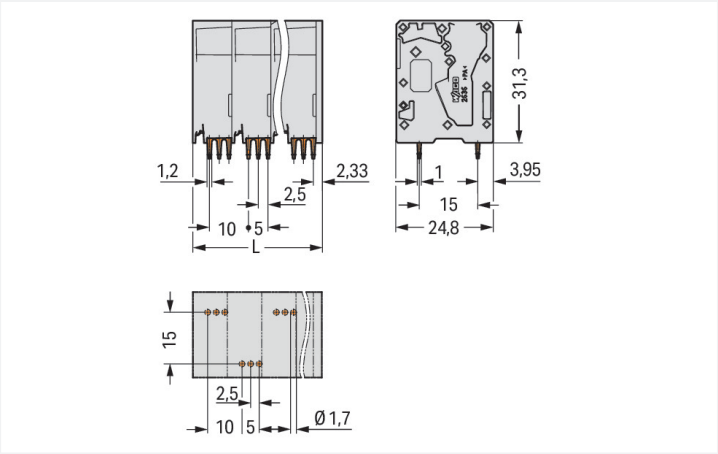

Dimensions in mm
L = (pole no. – 1) x pin spacing + 11.6 mm

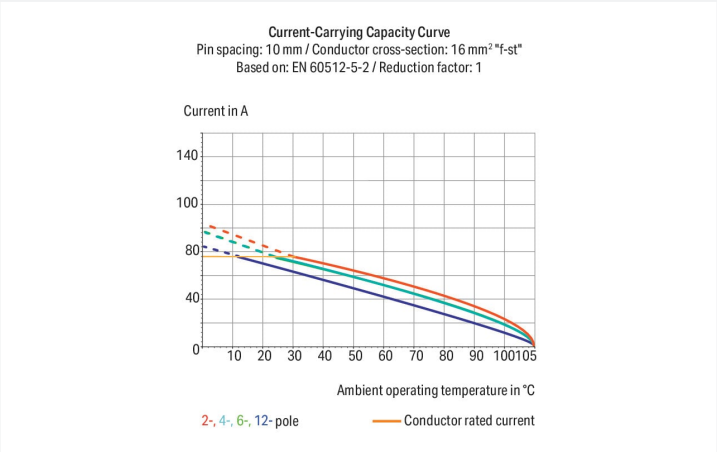

- PCB terminal strips with Push-in CAGE CLAMP® connection
- Push-in termination of solid and ferruled conductors
- Ideal for panel feedthrough applications via operation parallel to conductor entry
- Testing can be performed both parallel and perpendicular to conductor entry

Notes

Variants:	Other versions (or variants) can be requested from WAGO Sales or configured at https://configurator.wago.com/. Other pole numbers Direct marking Other colors

Electrical data

Ratings per	IEC/EN 60664-1		
Overvoltage category	III	III	II
Pollution degree	3	2	2
Nominal voltage	1000 V	1000 V	1000 V
Rated surge voltage	8 kV	8 kV	8 kV
Rated current	76 A	76 A	76 A

Ratings per UL	
Rated voltage UL (Use Group B)	600 V
Rated current UL (Use Group B)	66 A
Rated voltage UL (Use Group C)	600 V
Rated current UL (Use Group C)	66 A

Approvals per	CSA		
Use group	B	C	D
Rated voltage	600 V	600 V	-
Rated current	66 A	66 A	-

Connection data

Clamping units	3
Total number of potentials	3
Number of connection types	1
Number of levels	1

Connection 1

Connection technology	Push-in CAGE CLAMP®
Actuation type	Operating tool
Solid conductor	0.75 … 16 mm² / 18 … 4 AWG
Fine-stranded conductor	0.75 … 25 mm² / 18 … 4 AWG
Fine-stranded conductor; with insulated ferrule	0.75 … 16 mm²
Fine-stranded conductor; with uninsulated ferrule	0.75 … 16 mm²
Fine-stranded conductor; with twin ferrule	0.75 … 6 mm²
Strip length	18 … 20 mm / 0.71 … 0.79 inches
Conductor connection direction to PCB	90 °
Pole number	3

Physical data

Pin spacing	10 mm / 0.394 inches
Width	31.6 mm / 1.244 inches
Height	35.3 mm / 1.39 inches
Height from the surface	31.3 mm / 1.232 inches
Depth	24.8 mm / 0.976 inches
Solder pin length	4 mm
Solder pin dimensions	1.2 x 1 mm
Drilled hole diameter with tolerance	1.7 $^{(+0.1)}$ mm

Mechanical data

Mounting type	Feed-through mounting

PCB contact

PCB contact	THT
Solder pin arrangement	over the entire terminal strip (staggered)
Number of solder pins per potential	3

Material data

Note (material data)	Information on material specifications can be found here
Color	gray
Material group	I
Insulation material (main housing)	Polyamide (PA66)
Flammability class per UL94	V0
Clamping spring material	Chrome-nickel spring steel (CrNi)
Contact material	Electrolytic copper (E_{Cu})
Contact Plating	Tin
Fire load	0 MJ
Weight	24.8 g

 Continued on next page

Environmental requirements

Limit temperature range	-60 … +105 °C
Processing temperature	-35 … +60 °C
Continuous operating temperature	-60 … +105 °C

Commercial data

eCl@ss 10.0	27-44-04-01
eCl@ss 9.0	27-44-04-01
ETIM 9.0	EC002643
ETIM 8.0	EC002643
PU (SPU)	50 pcs
Packaging type	Box
Country of origin	PL
GTIN	4055143625548
Customs tariff number	85369010000

Environmental Product Compliance

RoHS Compliance Status	Compliant,No Exemption

Approvals / Certificates

General approvals

Approval	Standard	Certificate Name
CB DEKRA Certification B.V.	EN 60947-7-4	NL-61617
CSA DEKRA Certification B.V.	C22.2	70154737
cURus Underwriters Laboratories Inc.	C22.2 No. 158	E45172
KEMA/KEUR DEKRA Certification B.V.	EN 60947-7-4	71-110774

Downloads

Environmental Product Compliance

Compliance Search

Environmental Product Compliance
2636-3103/020-000

 Continued on next page

Documentation

Additional Information

Technical Section	03.04.2019	pdf 2027.26 KB	

CAD/CAE-Data

CAD data

2D/3D Models
2636-3103/020-000

CAE data

ZUKEN Portal
2636-3103/020-000

PCB Design

Symbol and Footprint
via SamacSys
2636-3103/020-000

Symbol and Footprint
via Ultra Librarian
2636-3103/020-000

1 Compatible Products

1.1 Optional Accessories

1.1.1 Ferrule

1.1.1.1 Ferrule

Item No.: 216-284
Ferrule; Sleeve for 1.5 mm² / AWG 16; insulated; electro-tin plated; electrolytic copper; gastight crimped; acc. to DIN 46228, Part 4/09.90; black

Item No.: 216-289
Ferrule; Sleeve for 10 mm² / AWG 8; insulated; electro-tin plated; electrolytic copper; gastight crimped; acc. to DIN 46228, Part 4/09.90; red

Item No.: 216-210
Ferrule; Sleeve for 16 mm² / AWG 6; insulated; electro-tin plated; electrolytic copper; gastight crimped; acc. to DIN 46228, Part 4/09.90; blue

Item No.: 216-286
Ferrule; Sleeve for 2.5 mm² / AWG 14; insulated; electro-tin plated; electrolytic copper; gastight crimped; acc. to DIN 46228, Part 4/09.90; blue

Item No.: 216-287
Ferrule; Sleeve for 4 mm² / AWG 12; insulated; electro-tin plated; electrolytic copper; gastight crimped; acc. to DIN 46228, Part 4/09.90; gray

Item No.: 216-288
Ferrule; Sleeve for 6 mm² / AWG 10; insulated; electro-tin plated; electrolytic copper; gastight crimped; acc. to DIN 46228, Part 4/09.90; yellow

1.1.2 Tool

1.1.2.1 Operating tool

Item No.: 210-721
Operating tool; Blade: 5.5 x 0.8 mm; with a partially insulated shaft; multicoloured

 Continued on next page

Installation Notes

Conductor termination

Insert fine-stranded conductors and remove all conductor types via operating tool.

Conductor termination

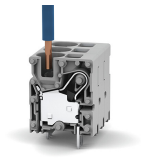

Insert solid conductors via push-in termination.