Upper part of housing - EH 45 F-C DS/ABS GY7035 - 2201770

Please be informed that the data shown in this PDF Document is generated from our Online Catalog. Please find the complete data in the user's documentation. Our General Terms of Use for Downloads are valid
(http://phoenixcontact.com/download)

DIN rail housing, Upper part, connection opening on both sides, width: 45.1 mm, color: light gray (7035)

Your advantages

- Item is part of the EH product range
- Tool-free mounting
- Available in overall widths from 22.5 mm ... 90 mm
- Inflammability class HB acc. to UL 94
- Variety of connection technologies
- Can be mounted on the DIN rail or the wall

RoHS

Key Commercial Data

Packing unit	1 pc
Minimum order quantity	10 pc
GTIN	4 046356 911306
GTIN	4046356911306
Weight per Piece (excluding packing)	20.000 g
Custom tariff number	85472000
Country of origin	India

Technical data

Item properties

Brief article description	Upper part of housing
Type	EH 45 F-C DS/ABS GY7035
Order No.	2201770

Upper part of housing - EH 45 F-C DS/ABS GY7035 - 2201770

Technical data

Item properties

Housing type	DIN rail housing
Housing series	EH
Type	Upper part
Max. IP code to attain	IP20
Mounting type	Snap in
Ventilation openings present	no

Dimensions

Width [w]	45.1 mm
Height [h]	74.65 mm
Depth [d]	36.95 mm
Depth from base support surface [d]	19.95 mm

Material data

Color (RAL)	light gray (7035)
Flammability rating according to UL 94	HB
Housing material	ABS

Ambient conditions

Ambient temperature (storage/transport)	-40 °C ... 55 °C
Ambient temperature (assembly)	-5 °C ... 80 °C
Ambient temperature (operation)	-40 °C ... 80 °C (depending on power dissipation)

PCB data

Mounting position	Vertical (horizontal DIN rail)
Type of PCB mount	Latching

General information

Type of note	Assembly instruction:
Note	Refer to the data sheet for the range in the download area.

Packaging information

Pieces per package	10
Denomination packing units	Pcs.

Standards and regulations

Flammability rating according to UL 94	HB

Environmental Product Compliance

China RoHS	Environmentally friendly use period: unlimited = EFUP-e
	No hazardous substances above threshold values

Upper part of housing - EH 45 F-C DS/ABS GY7035 - 2201770

Drawings

Dimensional drawing

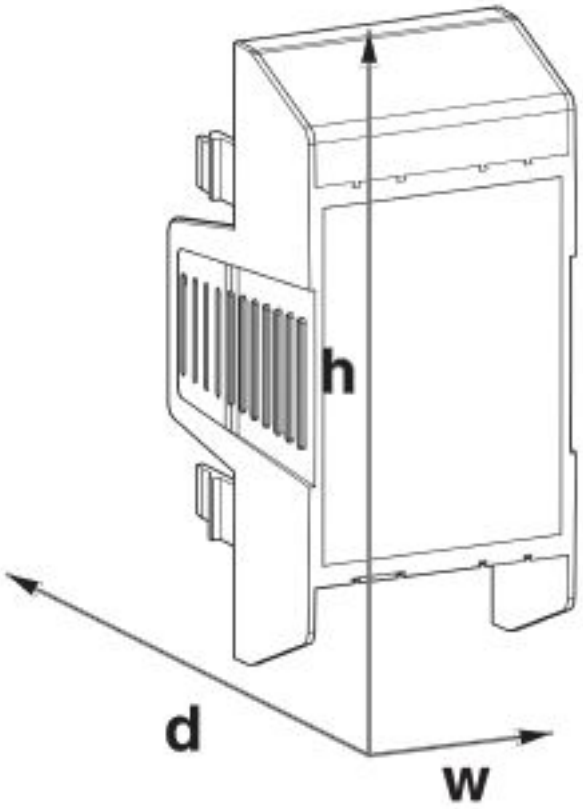

Classifications

eCl@ss

eCl@ss 5.0	27180500
eCl@ss 5.1	27180500
eCl@ss 6.0	27180800
eCl@ss 7.0	27182702
eCl@ss 8.0	27182702

Upper part of housing - EH 45 F-C DS/ABS GY7035 - 2201770

Classifications

eCl@ss

eCl@ss 9.0	27182702

ETIM

ETIM 4.0	EC001031
ETIM 5.0	EC001031
ETIM 6.0	EC001031
ETIM 7.0	EC001031

UNSPSC

UNSPSC 6.01	31261501
UNSPSC 7.0901	31261501
UNSPSC 11	31261501
UNSPSC 12.01	31261501
UNSPSC 13.2	31261501

Approvals

Approvals

Approvals

EAC

Ex Approvals

Approval details

EAC	EAC	B.01742

Accessories

Accessories

Filler plug

Upper part of housing - EH 45 F-C DS/ABS GY7035 - 2201770

Accessories

Filler plugs - EH 22,5 F-FP/ABS BK9005 - 2201845

DIN rail housing, Filler plug for unoccupied terminal points, with vents, width: 21.35 mm, color: black (9005)

Filler plugs - EH 22,5 F-FP/ABS GY7035 - 2201844

DIN rail housing, Filler plug for unoccupied terminal points, with vents, width: 21.35 mm, color: light gray (7035)

Necessary add-on products

PCB terminal block - MKDS 3/ 8-5,08 - 1712708

PCB terminal block, nominal current: 24 A, pitch: 5.08 mm, number of positions: 8, connection method: Screw connection with tension sleeve, mounting: Wave soldering, conductor/PCB connection direction: 0 °, color: green. The article can be aligned to create different nos. of positions!

PCB terminal block base - MKKDSH 3/ 8 - 1703283

PCB terminal block, nominal current: 24 A, pitch: 5 mm, number of positions: 8, connection method: Screw connection with tension sleeve, mounting: Wave soldering, conductor/PCB connection direction: 0 °, color: green. The article can be aligned to create different nos. of positions!

Feed-through header - MSTBV 2,5/ 8-G - 1753550

PCB headers, nominal current: 12 A, number of positions: 8, pitch: 5 mm, color: green, contact surface: Tin, mounting: Wave soldering

---

Upper part of housing - EH 45 F-C DS/ABS GY7035 - 2201770

Accessories

Feed-through header - MSTBV 2,5/ 6-G-5,08 - 1758050

PCB headers, nominal current: 12 A, number of positions: 6, pitch: 5.08 mm, color: green, contact surface: Tin, mounting: Wave soldering

---

Pin strip - PST 1,3/ 8-5,0 - 1933244

Pin strip, nominal current: 12 A, number of positions: 8, pitch: 5 mm, color: black, contact surface: Tin, mounting: THR soldering, The maximum current depends on the plug used. The lower of the two current values apply for plug and pin strip. The pin strip is made of highly temperature resistant plastic and is thus suitable for the reflow process.

Printed-circuit board connector - MCV 1,5/10-G-3,81 - 1803507

PCB headers, nominal current: 8 A, number of positions: 10, pitch: 3.81 mm, color: green, contact surface: Tin, mounting: Wave soldering

---

Phoenix Contact 2019 © - all rights reserved
http://www.phoenixcontact.com