20VT6 ✔ ACTIVE

Corcom | Corcom T

TE Internal #: 6609047-6

Single Phase Filters, 20A Current Rating, Stud Input, Stud Output, Corcom T

View on TE.com >

EMI & EMC Solutions > EMI Filters > Power Line Filters > Single Phase Filters > Single Phase Filters, Corcom T Series

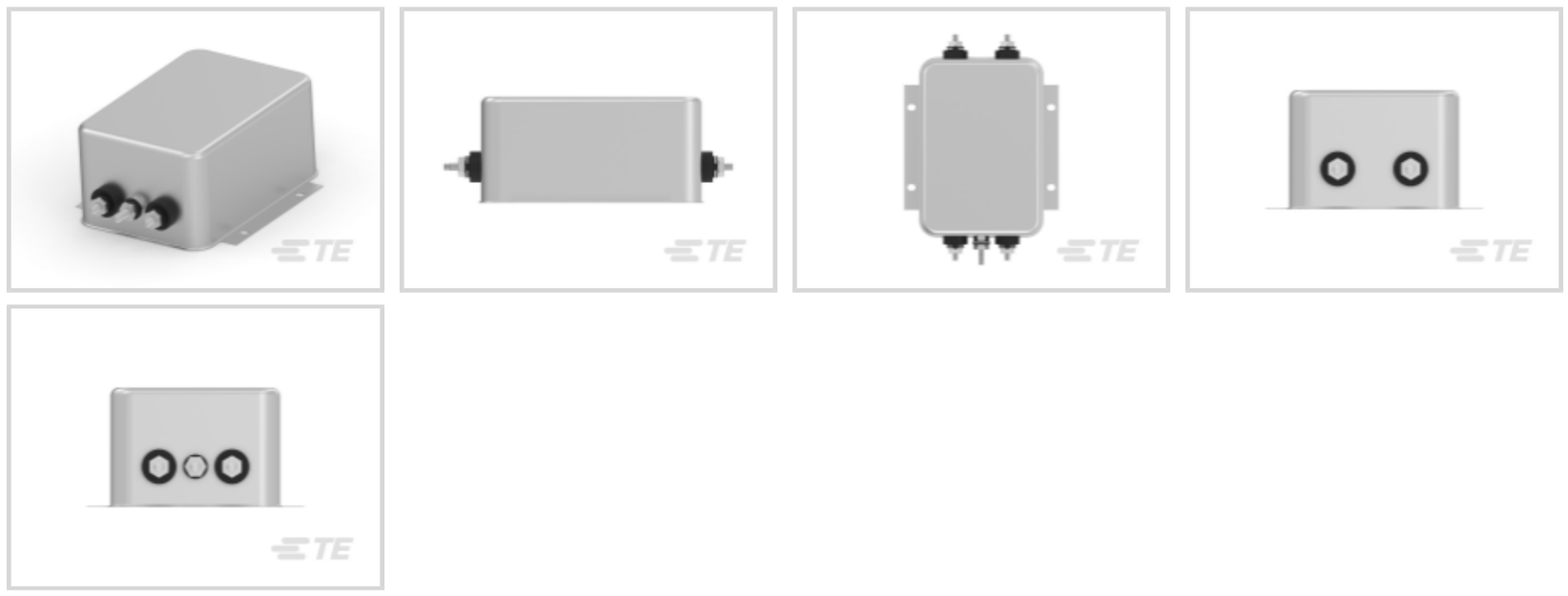

Current Rating: **20 A**

Input Termination Type: **Stud**

Output Termination Type: **Stud**

Leakage Current (Max) (120VAC, 60Hz): **1.2 mA**

Leakage Current (Max) (250VAC, 50Hz): **2 mA**

All Single Phase Filters, Corcom T Series (18)

Features

Product Type Features

Ground Choke Option	No
Filtering Requirements	Filtered
Input Termination Type	Stud
Output Termination Type	Stud

Electrical Characteristics

Operating Voltage	250 VAC
Current Rating	20 A
Leakage Current (Max) (120VAC, 60Hz)	1.2 mA
Leakage Current (Max) (250VAC, 50Hz)	2 mA

Mechanical Attachment

Panel Mount Feature Type	Flanged

Usage Conditions

Operating Temperature Range	-10 – 40 °C

Product Compliance

For compliance documentation, visit the product page on TE.com>

EU RoHS Directive 2011/65/EU	Compliant
EU ELV Directive 2000/53/EC	Compliant
China RoHS 2 Directive MIIT Order No 32, 2016	No Restricted Materials Above Threshold
EU REACH Regulation (EC) No. 1907/2006	Current ECHA Candidate List: JUNE 2024 (241) Candidate List Declared Against: JAN 2024 (240) Does not contain REACH SVHC
Halogen Content	Not Low Halogen - contains Br or Cl > 900 ppm.
Solder Process Capability	Not applicable for solder process capability

Product Compliance Disclaimer

This information is provided based on reasonable inquiry of our suppliers and represents our current actual knowledge based on the information they provided. This information is subject to change. The part numbers that TE has identified as EU RoHS compliant have a maximum concentration of 0.1% by weight in homogenous materials for lead, hexavalent chromium, mercury, PBB, PBDE, DBP, BBP, DEHP, DIBP, and 0.01% for cadmium, or qualify for an exemption to these limits as defined in the Annexes of Directive 2011/65/EU (RoHS2). Finished electrical and electronic equipment products will be CE marked as required by Directive 2011/65/EU. Components may not be CE marked. Additionally, the part numbers that TE has identified as EU ELV compliant have a maximum concentration of 0.1% by weight in homogenous materials for lead, hexavalent chromium, and mercury, and 0.01% for cadmium, or qualify for an exemption to these limits as defined in the Annexes of Directive 2000/53/EC (ELV). Regarding the REACH Regulation, the information TE provides on SVHC in articles for this part number is based on the latest European Chemicals Agency (ECHA) 'Guidance on requirements for substances in articles' posted at this URL: https://echa.europa.eu/guidance-documents/guidance-on-reach

Compatible Parts



TE Part # CAT-C8114-T1
Single Phase Filters, Corcom T Series

Also in the Series | Corcom T



Single Phase Filters(18)

Customers Also Bought



TE Part #6609047-5
Single Phase Filters, Corcom T Series

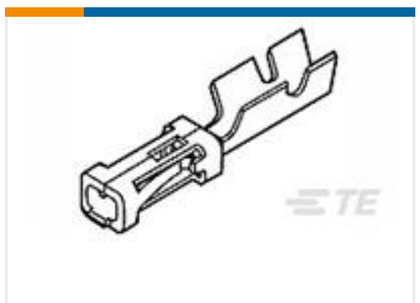

TE Part #87666-5
MOD IV RECP PLTD 15 SEL



TE Part #350561-2
UMNL PIN 24-18 .0126 AU/BR



TE Part #1546310-6
6P .563" DR BARRIER STRIP



TE Part #540963-000
RNF-100-BK Heat Shrink Tubing



TE Part #5053192266
RNF-100-1/2-BK-STK



TE Part #841292-000
TTMS-2.4-9

Documents

CAD Files

Customer View Model
ENG_CVM_CVM_6609047-6_C1.3d_igs.zip
English

Customer View Model
ENG_CVM_CVM_6609047-6_C1.3d_stp.zip
English

Customer View Model
ENG_CVM_CVM_6609047-6_C1.2d_dxf.zip
English

3D PDF
3D

By downloading the CAD file I accept and agree to the Terms and Conditions of use.

Datasheets & Catalog Pages

1654001_CORCOM_PRODUCT_GUIDE
English

1654001_CORCOM_PRODUCT_GUIDE_T_SERIES

English

Corcom Combined Selector Charts

English

1-1654250-1_CORCOM_EMI_RFI_QRG

English