PART NO.	WIRE SIZE	I.D. MIN.	O.D. MAX.	"L" MAX.	WIRE STOP QTY.
D-354	8	.165	.295	.864	ONE
E-362	6	.230	.374	1.045	ONE
F-364	4	.277	.457	1.155	ONE
G-372	2	.357	.538	1.280	ONE
H-383	1/0	.439	.620	1.440	TWO
J-388	2/0	.496	.697	1.440	TWO
K-393	3/0	.554	.760	1.540	TWO
L-378	4/0	.621	.860	1.540	TWO

(A)

DRWG. NO. CD-31003

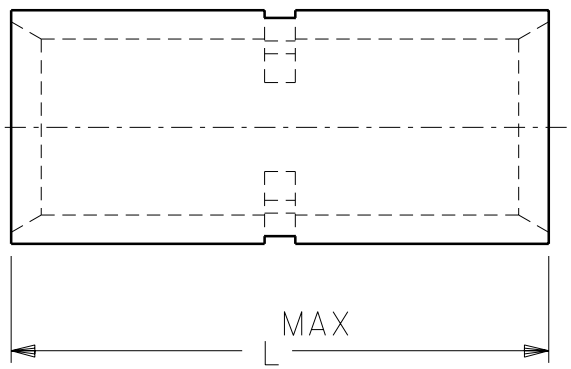

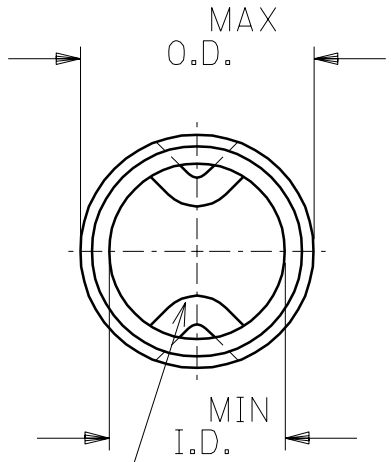

(A)
WIRE STOP SEE CHART FOR QUANTITY

LTR.	REVISIONS
A	ADDED WIRE STOP INFORMATION ETC60355 3/11 RCM

DIMENSIONS SHOWN (METRIC) INCH

UNLESS OTHERWISE SPECIFIED TOLERANCES: ANGULAR ± 1/2°

	INCH	METRIC
3 PLACE	± .005	± ---
2 PLACE	± .01	± 0.13
1 PLACE	± ---	± 0.25

DRAFT WHERE APPLICABLE MUST REMAIN WITHIN DIMENSIONS

REVISE ONLY ON CAD SYSTEM

TITLE
VERSAKRIMP
BUTT CONNECTORS

molex ETC INC.
PINELLAS PARK, FLA. 33781 U.S.A.

SHEET NO.

DATE 94/03/17

PART NO. SEE CHART

DRWG. NO. CD-31003

DRWG. BY RCM | CHK'D. BY JM | APP'D. BY FP | SCALE NONE

FILE NAME CD13003 CST

THIS DRAWING CONTAINS INFORMATION THAT IS PROPRIETARY TO MOLEX-ETC INC. AND SHOULD NOT BE USED WITHOUT WRITTEN PERMISSION.

DIV.

SIZE A