19205

MATERIAL NO.	ENG. NO.	WIRE SIZE	I.D. MIN.	O.D. MAX.	"L"	(E)
192070001	AS-302	22-18	.060/1.50	.130/3.30	.305/.325	(7.75/8.26)
192050001	BS-304	16-14	.091/2.30	.160/4.10	.295/.315	(7.50/8.00)
192050003	CS-303	12-10	.130/3.30	.225/5.70	.295/.315	(7.50/8.00)
192050004	D-355	8	.165/4.20	.295/7.50	.360/.390	(9.14/9.91)
192050006	E-361	6	.230/5.80	.374/9.50	.430/.460	(10.92/11.68)
192050007	F-365	4	.277/7.00	.457/11.60	.500/.530	(12.70/13.46)
192050008	G-373	2	.357/9.00	.538/13.70	.635/.665	(16.13/16.89)
192050009	H-384	1/0	.439/11.20	.620/15.70	.735/.765	(18.67/19.43)
192050010	J-389	2/0	.496/12.60	.697/17.70	.725/.755	(18.42/19.18)
192150049	K-394	3/0	.545/13.80	.760/19.30	.735/.765	(18.67/19.43)
192150050	L-379	4/0	.621/15.80	.860/21.80	.760/.790	(19.30/20.07)

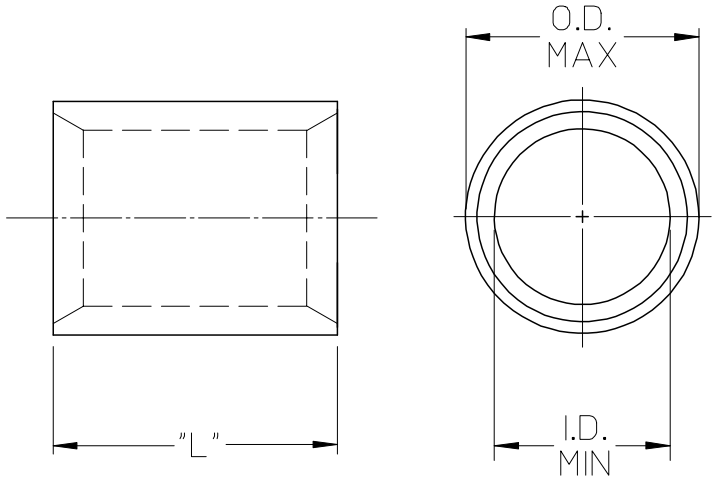

NOTE(S):

1. MATERIAL: COPPER
2. PLATING: ELECTRO-TIN

SALES DRAWING

REV	DESCRIPTION
E	REV'D "L" DIM EC NO: ETC2008-0020 DRWN:RSTONE 2007/08/17 CH'KD:J.MACNEIL 2007/08/20 APPR:JMACNEIL 2007/08/20

QUALITY SYMBOLS: ▼ - 0; ▽ - 0

GENERAL TOLERANCES (UNLESS SPECIFIED)	mm	INCH
4 PLACES	± ---	± ---
3 PLACES	± ---	± ---
2 PLACES	± ---	± ---
1 PLACE	± ---	± ---
ANGULAR ±1/2°		

DRAFT WHERE APPLICABLE MUST REMAIN WITHIN DIMENSIONS

SCALE 2:1 | DESIGN UNITS INCH | THIRD ANGLE PROJECTION | REVISE ON CAD ONLY

DIMENSION STYLE IN/MM

DRAWN BY DLM DATE 03/07/08

CHECKED BY HEB DATE 03/07/08

APPROVED BY RWD DATE 03/07/08

TITLE: VERSAKRIMP SEAMLESS PARALLEL CONNECTORS

molex MOLEX INCORPORATED

MATERIAL NO. (SEE CHART) | DOCUMENT NO. SD-19205-007 | SHEET NO. 1 OF 1

THIS DRAWING CONTAINS INFORMATION THAT IS PROPRIETARY TO MOLEX INCORPORATED AND SHOULD NOT BE USED WITHOUT WRITTEN PERMISSION

A

tb_frame_A
rev. B1 2000/08/01