MATERIAL NUMBER	ENGINEERING NUMBER	STUD SIZE	PACKAGING
191930159	D-351-10	10	LOOSE PIECE
191930163	D-351-14	1/4	
191930171	D-351-56	5/16	
191930167	D-351-38	3/8	
191930175	D-351-76	7/16	
191930162	D-351-10T	10	TAPE MOUNTED
191930166	D-351-14T	1/4	
191930174	D-351-56T	5/16	
191930170	D-351-38T	3/8	
191930177	D-351-76T	7/16	

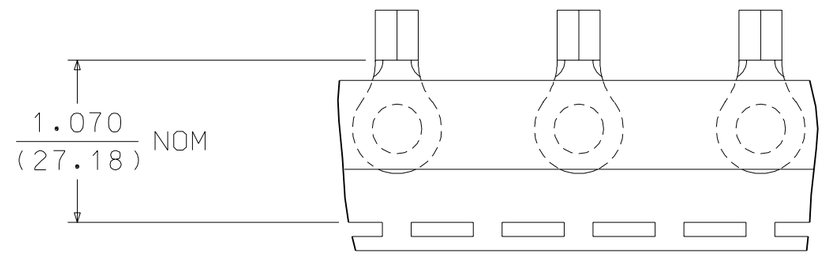

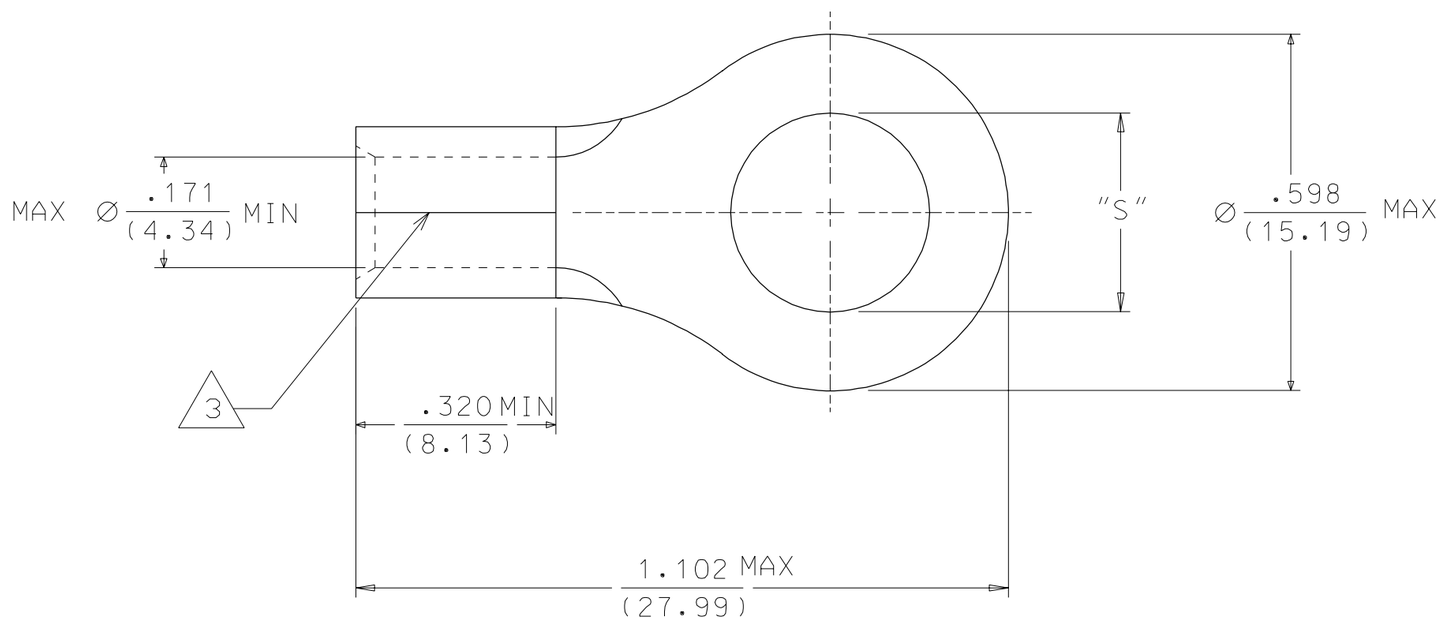

SALES DRAWING

NOTES:
1. MATERIAL: COPPER
   PLATING: ELECTROPLATE TIN
2. ALL DIMENSIONS IN INCHES/(MM).
3. BRAZED SEAM.

REV	DESCRIPTION
A	NEW RELEASE EC NO. ETC2001-0270 DRWN: BRE 01/06/11 CH'K: HEB 01/06/11 APPR: RWD 01/06/11

QUALITY SYMBOLS
MAJOR =0
CRITICAL (C) =0

GENERAL TOLERANCES: (UNLESS SPECIFIED)

	mm	INCH
4 PLACES	±0.	±.
3 PLACES	±0.	±.
2 PLACES	±0.	±.
1 PLACE	±0.	±.
ANGULAR: ±		°

DRAFT WHERE APPLICABLE MUST REMAIN WITHIN DIMENSIONS

SCALE 4 : 1
DESIGN UNITS ☐ mm ☒ INCH
THIRD ANGLE PROJECTION
DIMENSIONS: ☐ mm/INCH ☒ INCH/mm ☐ mm ONLY
SHT REV
REVISE ON CAD ONLY

DRAWN BY & DATE BRE 01/06/07
CHECKED BY & DATE HEB 01/06/07
APPROVED BY & DATE RWD 01/06/07
CAD FILENAME SD-19163-017.DWG

TITLE: RING TONGUE TERMINAL VERSAKRIMP 8 AWG

molex MOLEX INCORPORATED

MATERIAL NO. SEE CHART
DRAWING NO. SD-19193-017
SHEET NO. 1 OF 1
SIZE B

THIS DRAWING CONTAINS INFORMATION THAT IS PROPRIETARY TO MOLEX INCORPORATED AND SHOULD NOT BE USED WITHOUT WRITTEN PERMISSION.