MATERIAL NO.	ENG. NO.	MATERIAL NO. (TAPED)	ENG NO. (TAPED)	COLOR	MWID	OD (MAX)	"L" MAX	"B" (MAX)	ID (MIN)	"H" (NOM)
191540004	A-245X	191540006	A-245XT	RED	.150 (3.81)	.24 (6.1)	.98 (24.9)	.20 (5.1)	.060 (1.52)	.49 (12.4)
191540015	B-231X	191540017	B-231XT	BLUE	.175 (4.45)	.27 (6.9)	1.00 (25.4)	.24 (6.1)	.080 (2.03)	
191540028	C-246X	191540030	C-246XT	YELLOW	.260 (6.60)	.36 (9.2)	1.14 (29.0)	.30 (7.6)	.125 (3.17)	.43 (10.9)

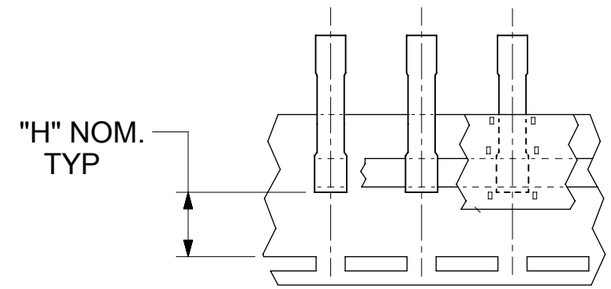

TAPE MOUNTED PARTS

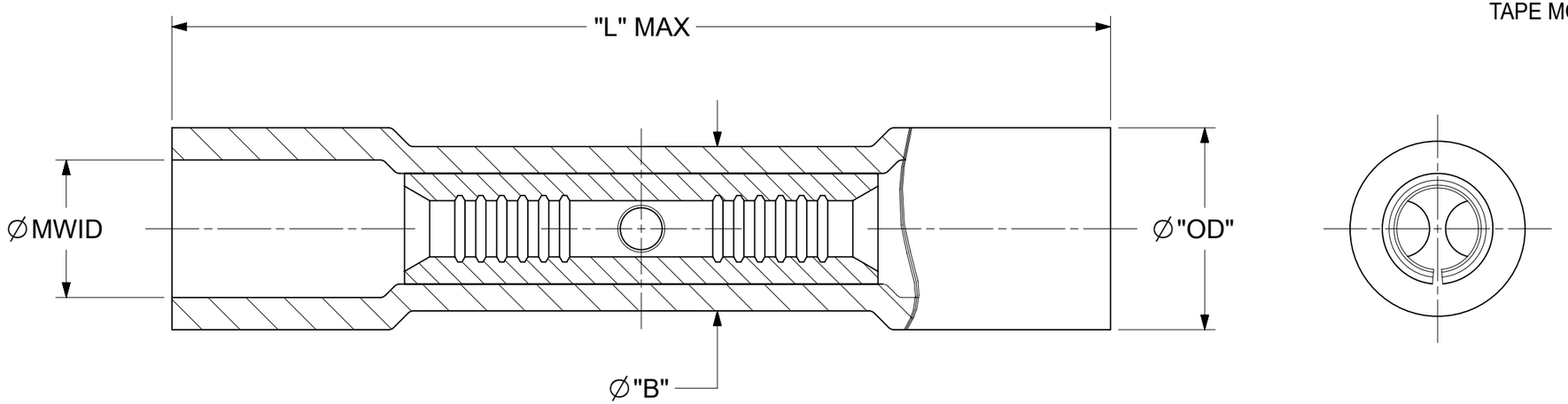

NOTES:

1. MATERIALS: PVC INSULATION OVER TIN-PLATED COPPER SPLICE.
2. COLOR: SEE CHART.
3. MWID = MAXIMUM WIRE INSULATION DIAMETER
4. PARTS ARE RoHS COMPLIANT.

THIS DRAWING CONTAINS INFORMATION THAT IS PROPRIETARY TO MOLEX ELECTRONIC TECHNOLOGIES, LLC AND SHOULD NOT BE USED WITHOUT WRITTEN PERMISSION

FUNCTIONAL SYMBOLS: EA = 0; EC = 0; EP = 0

DIVISIONAL SYMBOLS

DIMENSION UNITS: INCH/MM
SCALE: NTS

GENERAL TOLERANCES (UNLESS SPECIFIED)

	MM	INCH
4 PLACES	±	±
3 PLACES	±	± 0.005
2 PLACES	± 0.13	± 0.01
1 PLACE	± 0.25	±
0 PLACES	±	±
ANGULAR TOL	± 0.5 °	

DRAFT WHERE APPLICABLE MUST REMAIN WITHIN DIMENSIONS

CURRENT REV DESC: "L MAX" DIM UPDATE: .98 WAS .97 & 1.00 WAS .98

EC NO: 713658
DRWN: DMYRICK 2022/07/08
CHK'D: THEANY 2022/07/11
APPR: THEANY 2022/07/11

INITIAL REVISION:
DRWN: ETHRODAHL 2009/07/09
APPR: JMACNEIL 2009/07/09

THIRD ANGLE PROJECTION

DRAWING: B-SIZE
SERIES: 19154

molex

BUTT SPLICE CONNECTOR, INSULKRIMP

PRODUCT CUSTOMER DRAWING

DOCUMENT NUMBER	DOC TYPE	DOC PART	REVISION
SD-19154-006	PSD	001	A1

MATERIAL NUMBER	CUSTOMER	SHEET NUMBER
SEE CHART	GENERAL MARKET	1 OF 1

DOCUMENT STATUS	P1	RELEASE DATE	2022/07/11 18:35:51

FORMAT: Eng-lega-master-tb-prod-B
REVISION: E1
DATE: 2021/05/01