FILE NO.	C-CD-803-01

NOTES:

① MAT'L: COPPER (STOCK TKN. $\frac{.040 \pm .001}{1.02}$)
PLATING: ELECTRO TIN (.0003 MIN)
② TIN-PLATED BRASS FUNNEL FERRULE
③ NYLON INSULATION (COLOR CODED YELLOW)

STUD SIZES: (±.005)

02 = .094
04 = .119
06 = .146
08 = .173
10 = .198
14 = .265
56 = .328
38 = .390

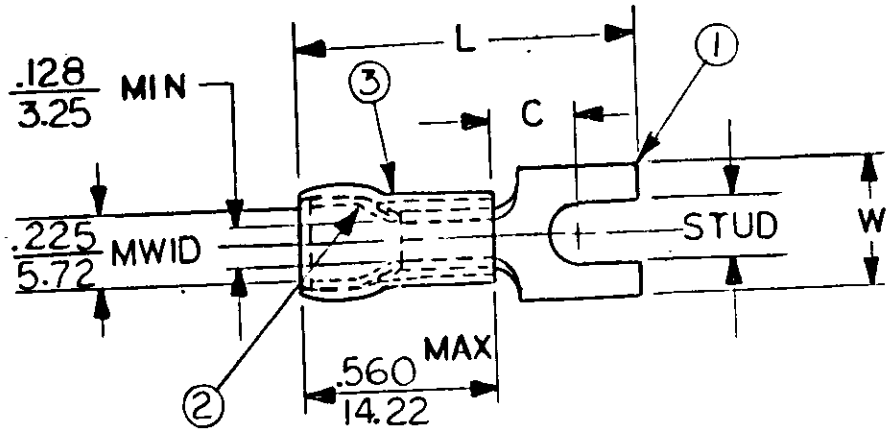

"UL" LISTING #E32244
"CSA" LISTING #18689

WIRE SIZE: 12 - 10 AWG / 4.0 - 6.0 MM^2

ALL DIMENSIONS = $\frac{\text{INCHES}}{\text{MM}}$ (MWID) = DENOTES MAXIMUM WIRE INSULATION DIAMETER

PART NUMBER	"W" ±.010	"C" MIN.	"L" MAX.				AVAILABLE STUD SIZES	
C-8102-	.415 / 10.41	.305 / 7.75	1.090 / 27.69				08	
C-8105-	.320 / 8.13	.305 / 7.75	1.090 / 27.69				06	

DIMENSIONAL TOLERANCES UNLESS OTHERWISE SPECIFIED			REFERENCE	SCALE: NTS	DATE	TITLE: SPADED TONGUE TERMINAL AVIKRIMP 800-SERIES	ETC molex INCORPORATED
FRAC.	DEC.	ANG.		DRWN. BY: JJ	11·12·84		
±	±	±		CHKD. BY: GZ	11·26·84		DWG. NO. A CUSTOMER DWG
				APPRD. BY:			