FILE NO. AA-CD-803-02

NOTES:

① MAT'L: COPPER
PLATING: ELECTRO TIN (.0003 MIN)
② TIN-PLATED BRASS FUNNEL FERRULE
③ NYLON INSULATION (COLOR CODED RED)

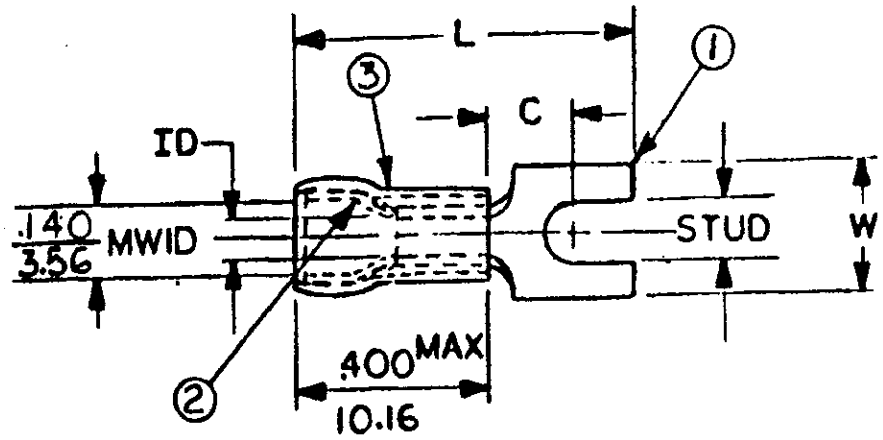

STUD SIZES: (±.005)

02 = .094
04 = .119
06 = .146
08 = .173
10 = .198
14 = .265
56 = .328
38 = .390

"UL" LISTING #E32244
"CSA" LISTING #18689

WIRE SIZE: 22 – 18 AWG
.25 – 1.5 MM²

ALL DIMENSIONS = INCHES / MM

(MWID) = DENOTES MAXIMUM WIRE INSULATION DIAMETER

PART NUMBER	"W" ±.010	"C" MIN.	"L" MAX.	"ID" MIN.			AVAILABLE STUD SIZES	STOCK THICKNESS	
AA-8109-	.187 / 4.75	.183 / 4.65	.727 / 18.47	.054 / 1.37			02, 04	.031 ±.001 / .79	

DIMENSIONAL TOLERANCES UNLESS OTHERWISE SPECIFIED			REFERENCE	SCALE: NTS	DATE	TITLE:
FRAC.	DEC.	ANG.		DRWN. BY: JJ	11·8·84	SPADE TONGUE TERMINAL AVIKRIMP 800-SERIES
±	±	±		CHKD. BY: GZ	11·14·84	
				APPRD. BY:		

ETC molex INCORPORATED

DWG. NO. A CUSTOMER DWG