19073

MATERIAL NUMBER	ENG. NO.	MATERIAL NUMBER TAPE MOUNTED	ENG. NO.	STUD SIZE	"S" ±.005	"W" MAX	"C" MIN	"L" MAX
190730145	C-801-12	190730146	C-801-12T	12	.515 (13.08)	.760 (19.30)	.611 (15.52)	1.580 (40.13)
190730148	C-801-14	---------	---------	14	.265 (6.73)			
190730150	C-801-38	---------	---------	38	.390 (9.91)			
190730152	C-801-56	---------	---------	56	.328 (8.33)			
190730154	C-801-76	---------	---------	76	.453 (11.51)			
190730156	C-828-04	190730157	C-828-04T	04	.119 (3.02)	.385 (9.78)	.303 (7.70)	1.091 (27.71)
190730160	C-828-06	190730162	C-828-06T	06	.146 (3.71)			
190730165	C-828-08	190730167	C-828-08T	08	.173 (4.39)			
190730170	C-828-10	190730172	C-828-10T	10	.198 (5.03)			
190730175	C-828-14	---------	---------	14	.265 (6.73)			

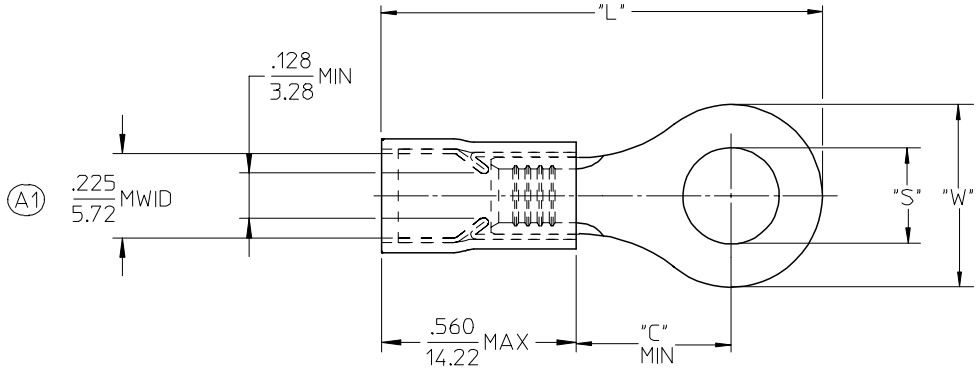

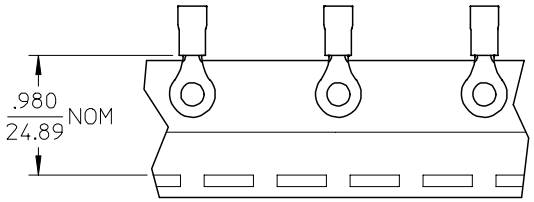

SALES DRAWING

NOTES:
1. MATERIAL: COPPER (.040/1.02) THICK.
   PLATING: ELECTROPLATE TIN
2. FERRULE: TIN PLATED BRASS
3. INSULATION: YELLOW NYLON
4. MWID=MAXIMUM WIRE INSULATION DIA.
5. ALL DIMENSIONS IN INCHES (MM).
6. WIRE SIZE: 12-10 AWG
   4.0-6.0 MM²

EC NO: ETC2006-0152
DRWN: ASAYDEH 2005/12/12
CH'KD: JLOMASTRO 2005/12/13
APPR: RDEROSS 2005/12/14
DESCRIPTION
A1
REV

QUALITY SYMBOLS
▼ = 0
▽ = 0

GENERAL TOLERANCES (UNLESS SPECIFIED)

	mm	INCH
4 PLACES	± ---	± ---
3 PLACES	± ---	± .005
2 PLACES	± 0.13	± .01
1 PLACE	± 0.25	± ---
ANGULAR ± 1 °		

DRAFT WHERE APPLICABLE
MUST REMAIN WITHIN DIMENSIONS

SCALE 4:1
DESIGN UNITS INCH
DIMENSION STYLE IN/MM
DRAWN BY DMYRICK DATE 03/12/15
CHECKED BY SBEITZEL DATE 03/12/15
APPROVED BY RDEROSS DATE 03/12/15

THIRD ANGLE PROJECTION
REVISE ON CAD ONLY

TITLE
RING TONGUE TERMINAL
AVIKRIMP, 800-SERIES
12-10 AWG

molex MOLEX INCORPORATED

MATERIAL NO. SEE CHART
DOCUMENT NO. SD-19073-007
SHEET NO. 1 OF 1

THIS DRAWING CONTAINS INFORMATION THAT IS PROPRIETARY TO MOLEX INCORPORATED AND SHOULD NOT BE USED WITHOUT WRITTEN PERMISSION

B

tb_frame_B
rev. B1 2000/08/01