19073

MATERIAL NUMBER	ALTERNATE NUMBER	STUD SIZE	"S"	"W"	"C"	Ⓒ "L"	"I.D."	PACKAGING
190730036	AA-832-04	04	.119(3.02)	.25(6.5)	.24(6.1)	.78(19.8)	.062(1.57)	LOOSE PIECE
190730038	AA-832-06	06	.146(3.71)	.25(6.5)	.24(6.1)	.78(19.8)	.062(1.57)	
190730042	AA-832-08	08	.173(4.39)	.25(6.5)	.24(6.1)	.78(19.8)	.062(1.57)	
190730046	AA-833-04	04	.119(3.02)	.27(6.9)	.24(6.1)	.82(20.7)	.062(1.57)	
190730047	AA-833-06	06	.146(3.71)	.27(6.9)	.24(6.1)	.82(20.7)	.062(1.57)	
190730048	AA-833-08	08	.173(4.39)	.27(6.9)	.24(6.1)	.82(20.7)	.062(1.57)	
190730049	AA-833-10	10	.198(5.03)	.27(6.9)	.24(6.1)	.82(20.7)	.062(1.57)	
190730001	AA-8111-02	02	.094(2.38)	.19(4.8)	.17(4.4)	.72(18.2)	.054(1.37)	
190730003	AA-8111-04	04	.119(3.02)	.19(4.8)	.17(4.4)	.72(18.2)	.054(1.37)	
190730037	AA-832-04T	04	.119(3.02)	.25(6.5)	.24(6.1)	.78(19.8)	.062(1.57)	TAPE MOUNTED
190730040	AA-832-06T	06	.146(3.71)	.25(6.5)	.24(6.1)	.78(19.8)	.062(1.57)	
190730043	AA-832-08T	08	.173(4.39)	.25(6.5)	.24(6.1)	.78(19.8)	.062(1.57)	
190730050	AA-833-10T	10	.198(5.03)	.27(6.9)	.24(6.1)	.82(20.7)	.062(1.57)	
190730002	AA-8111-02T	02	.094(2.38)	.19(4.8)	.17(4.4)	.72(18.2)	.054(1.37)	
190730004	AA-8111-04T	04	.119(3.02)	.19(4.8)	.17(4.4)	.72(18.2)	.054(1.37)	

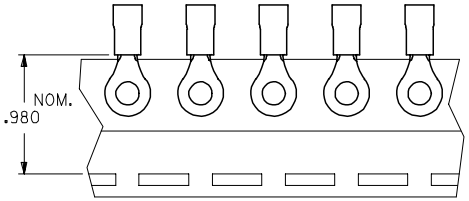

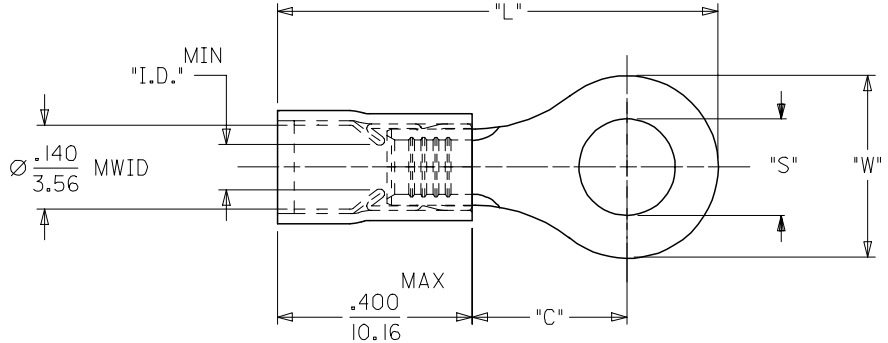

NOTES:
1. MATERIAL: COPPER
   PLATING: ELECTROPLATE TIN
2. FERRULE: TIN-PLATED BRASS
3. INSULATION: RED NYLON
4. MWID=MAXIMUM WIRE INSULATION DIA.
5. ALL DIMENSIONS IN INCHES (MM).

CHANGED DIMENSIONS
EC NO: ETC2007-0178
DRWN: JLOMASTRO 2006/10/24
CH'KD: JMACNEIL 2006/10/24
APPR: JMACNEIL 2006/10/26
DESCRIPTION
REV

QUALITY SYMBOLS
▼=0
▽=0

GENERAL TOLERANCES (UNLESS SPECIFIED)

	mm	INCH
4 PLACES	± ---	± ---
3 PLACES	± ---	± .005
2 PLACES	± 0.13	± .01
1 PLACE	± 0.25	± ---
ANGULAR ±1/2°		

DRAFT WHERE APPLICABLE MUST REMAIN WITHIN DIMENSIONS

DIMENSION STYLE: IN/MM
SCALE: ---
DESIGN UNITS: INCH
THIRD ANGLE PROJECTION

DRAWN BY: ASAYDEH DATE: 05/12/07
CHECKED BY: JLOMASTRO DATE: 05/12/07
APPROVED BY: RDEROSS DATE: 05/12/07

TITLE: RING TONGUE TERMINAL 22-18 AWG AVIKRIMP, 800-SERIES

molex MOLEX INCORPORATED

MATERIAL NO.: SEE CHART
DOCUMENT NO.: SD-19073-004
SHEET NO.: 1 OF 1
SIZE: B

THIS DRAWING CONTAINS INFORMATION THAT IS PROPRIETARY TO MOLEX INCORPORATED AND SHOULD NOT BE USED WITHOUT WRITTEN PERMISSION