| MATERIAL NO. LOOSE PIECE | ENG. NO. | MATERIAL NO. TAPE MOUNTED | ENG. NO. | STUD SIZE | ±.003 "S" | "W" MAX. (A) | "C" MIN. | "L" MAX. | (A) "H" ±.020/0.51 |
|---|---|---|---|---|---|---|---|---|---|
| 190440137 | B-101-12HD | 190440138 | B-101-12HDT | 12 | .515 (13.10) | .760 (19.30) | .611 (15.52) | 1.280 (32.51) | 1.556 (39.52) |
| 190440139 | B-101-14HD | -------- | -------- | 14 | .265 (6.73) | | | | |
| 190440140 | B-101-38HD | -------- | -------- | 38 | .390 (9.91) | | | | |
| 190440141 | B-101-56HD | -------- | -------- | 56 | .328 (8.33) | | | | |
| 190440142 | B-101-76HD | 190440229 | B-101-76HDT | 76 | .453 (11.51) | | | | |
| 190440161 | B-128-06HD | -------- | -------- | 6 | .146 (3.71) | .385 (9.78) | .303 (7.70) | .785 (19.94) | 1.234 (31.34) |
| 190440162 | B-128-08HD | -------- | -------- | 8 | .173 (4.39) | | | | |
| 190440163 | B-128-10HD | 190440164 | B-128-10HDT | 10 | .198 (5.03) | | | | |
| 190440166 | B-130-10HD | 190440022 | B-130-10HDT | 10 | .198 (5.03) | .540 (13.72) | .393 (9.98) | .952 (24.18) | |
| 190440167 | B-130-14HD | 190440023 | B-130-14HDT | 14 | .265 (6.73) | | | | |
| 190440168 | B-130-56HD | 190440024 | B-130-56HDT | 56 | .328 (8.33) | | | | |
| 190440172 | B-136-04HD | -------- | -------- | 4 | .119 (3.02) | .292 (7.42) | (A) .303 (7.70) | .741 (18.82) | |
| 190440173 | B-136-06HD | 190440026 | B-136-06HDT | 6 | .146 (3.71) | | | | |
| 190440174 | B-136-08HD | 190440027 | B-136-08HDT | 8 | .173 (4.39) | | | | |
| 190440180 | B-140-10HD | --------- | -------- | 10 | .198 (5.03) | .598 (15.19) | .466 (11.84) | 1.056 (26.82) | 1.426 (36.22) |
| 190440182 | B-140-14HD | 190440183 | B-140-14HDT | 14 | .265 (6.73) | | | | |
| 190440184 | B-140-38HD | 190440185 | B-140-38HDT | 38 | .390 (9.91) | | | | |
| 190440186 | B-140-56HD | 190440187 | B-140-56HDT | 56 | .328 (8.33) | | | | |

(A) (A)

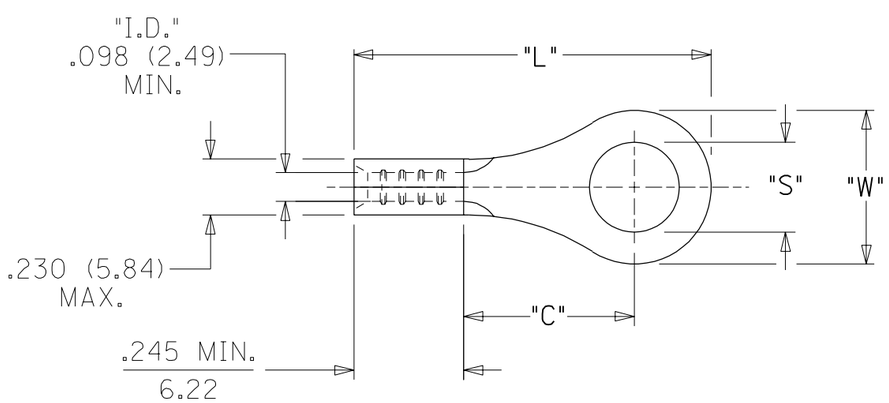


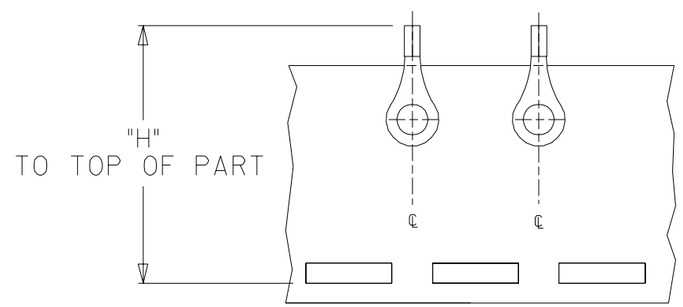


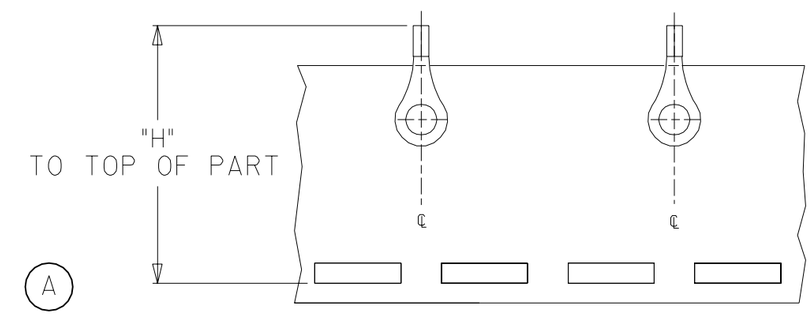


DOUBLE SPACE ON
B-101-**HDT AND B-140-**HDT
ONLY

# SALES DRAWING

NOTE(S):

1. MATERIAL: COPPER (.050/1.27 THICK)
2. PLATING: ELECTROPLATE TIN.
3. ALL DIMENSIONS IN INCHES/(MM).

WIRE SIZE: 16-14 AWG
1.0 - 2.5 $MM^2$

UPDATE TO MX STDS.
EC NO. ETC2003-0203
DRWN: DLM 04/05/05
CH'K: HB 04/05/05
APPR: RWD 04/05/05
DESCRIPTION
A
REV

QUALITY SYMBOLS
MAJOR = Ø
CRITICAL (C) = Ø

GENERAL TOLERANCES: (UNLESS SPECIFIED)

| | mm | INCH |
|---|---|---|
| 4 PLACES | ±0.---- | ±.---- |
| 3 PLACES | ±0.--- | ±.005 |
| 2 PLACES | ±0.13 | ±.010 |
| 1 PLACE | ±0.25 | ±.--- |

ANGULAR: ±1/2°

DRAFT WHERE APPLICABLE MUST REMAIN WITHIN DIMENSIONS

SCALE NTS
DESIGN UNITS ☐mm ☒INCH
THIRD ANGLE PROJECTION
DIMENSIONS: ☐ mm/INCH ☒ INCH/mm ☐ mm ONLY
SHT REV
REVISE ON CAD ONLY

DRAWN BY & DATE DLM 03/02/28
CHECKED BY & DATE SB 03/02/28
APPROVED BY & DATE RWD 03/02/28
CAD FILENAME SD19044008.DGN

TITLE: RING TONGUE TERMINAL
HEAVY-DUTY KRIMPTITE
16-14 AWG

molex MOLEX INCORPORATED

MATERIAL NO. (SEE CHART)
DRAWING NO. SD-19044-008
SHEET NO. 1 OF 1

THIS DRAWING CONTAINS INFORMATION THAT IS PROPRIETARY TO MOLEX INCORPORATED AND SHOULD NOT BE USED WITHOUT WRITTEN PERMISSION.

SIZE B