THIS DRAWING IS UNPUBLISHED. RELEASED FOR PUBLICATION -,- .
© COPYRIGHT - BY TYCO ELECTRONICS CORPORATION. ALL INTERNATIONAL RIGHTS RESERVED.

LOC	DIST
GP	00

REVISIONS

P	LTR	DESCRIPTION	DATE	DWN	APVD
	C	INITIAL RELEASE	25/NOV/08	ECC	MN

1. PRODUCT AND PROCESSING MUST MEET REQUIREMENTS OF TYCO ELECTRONICS STANDARD 230-702.

2. 100% CONTINUITY TESTING REQUIRED FOR OPENS AND SHORTS.

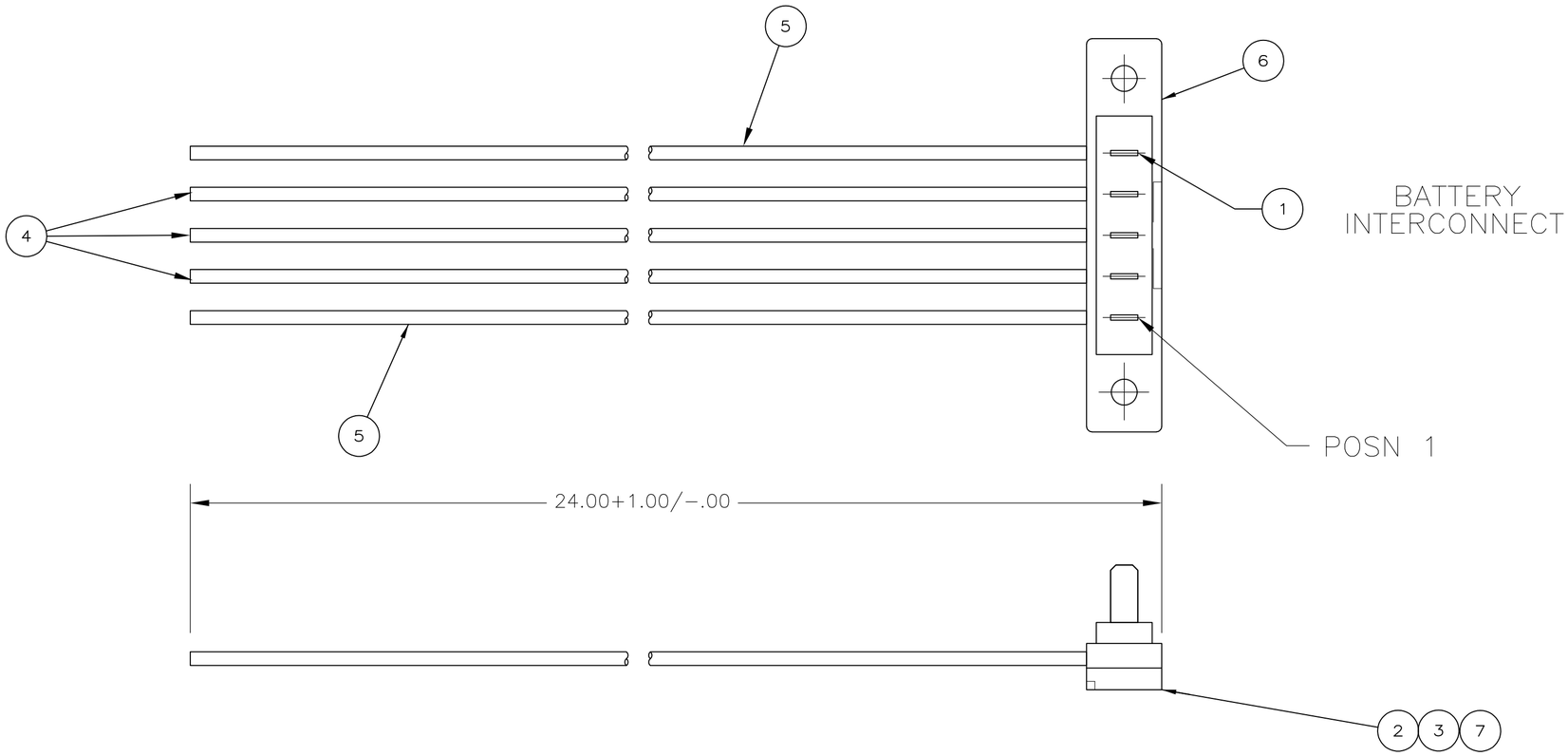

1902937

BATTERY INTERCONNECT

- 18 AWG WHT — 5
- 22 AWG WHT — 4
- 22 AWG WHT — 3
- 22 AWG WHT — 2
- 18 AWG WHT — 1

1902937-1

TYCO ELECTRONICS P/N

ITEM NO	DESCRIPTION			
7	SOLDER, BAR	LB	AR	
6	MOLDING COMPOUND, BLACK	LB	AR	
5	WIRE, 18 AWG, 7/30 STR, UL1007, WHT	FT	4.0	
4	WIRE, 22 AWG, 7/30 STR, UL1007, WHT	FT	6.0	
3	FLUX, KESTER 951	OZ	AR	
2	SOLDER, WIRE, .020 DIA	LB	AR	
1	BLADE CONTACT, STRAIGHT TAIL	PC	5	
		U/M	—1	

THIS DRAWING IS A CONTROLLED DOCUMENT.

DIMENSIONS: INCHES

TOLERANCES UNLESS OTHERWISE SPECIFIED:
0 PLC ± -
1 PLC ± -
2 PLC ± -
3 PLC ± -
4 PLC ± -
ANGLES ± -

MATERIAL -

FINISH -

DWN E.C. CLAYBAUGH 25/NOV/08
CHK M NGUYEN 25/NOV/08
APVD M. NGUYEN 25/NOV/08
PRODUCT SPEC —
APPLICATION SPEC —
WEIGHT —

Tyco Electronics
Tyco Electronics Corporation
Harrisburg, PA 17105-3608

NAME CABLE ASSY, BATTERY INTERCONNECT, KEYLESS
—
—

SIZE	CAGE CODE	DRAWING NO	RESTRICTED TO
A2	00779	C-1902937	—

CUSTOMER DRAWING | SCALE N.T.S. | SHEET 1 OF 1 | REV C

1471-9 (1/08)

25NOV2008 9:59am C:\A-Lucent\NGUYEN_M\1902937_1-c.dwg