MATERIAL NO. LOOSE PC	ENGINEERING NO. LOOSE PC	MATERIAL NO. ON TAPE	ENGINEERING NO. ON TAPE	WIRE SIZE	INSULATOR COLOR	ID MIN REF	MWID	C MAX	L MAX	H NOMINAL	BARE TAB POSITION
190120029	AA-8301	190120030	AA-8301T	22-18 AWG	RED	.058/1.47	.110/2.79	.420/10.67	.870/22.10	.54/13.7	AWAY FROM TAPE
190120031	BB-8302	190120032	BB-8302T	16-14 AWG	BLUE	.079/2.00	.140/3.56	.420/10.67	.870/22.10	.54/13.7	AWAY FROM TAPE
190120033	C-8303	190120034	C-8303T	12-10 AWG	YELLOW	.136/3.45	.225/5.71	.580/14.73	1.030/26.16	.57/14.4	TOWARD TAPE

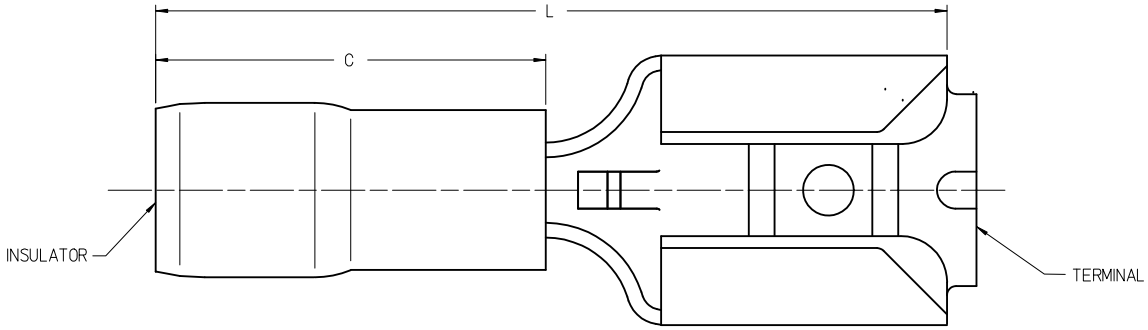

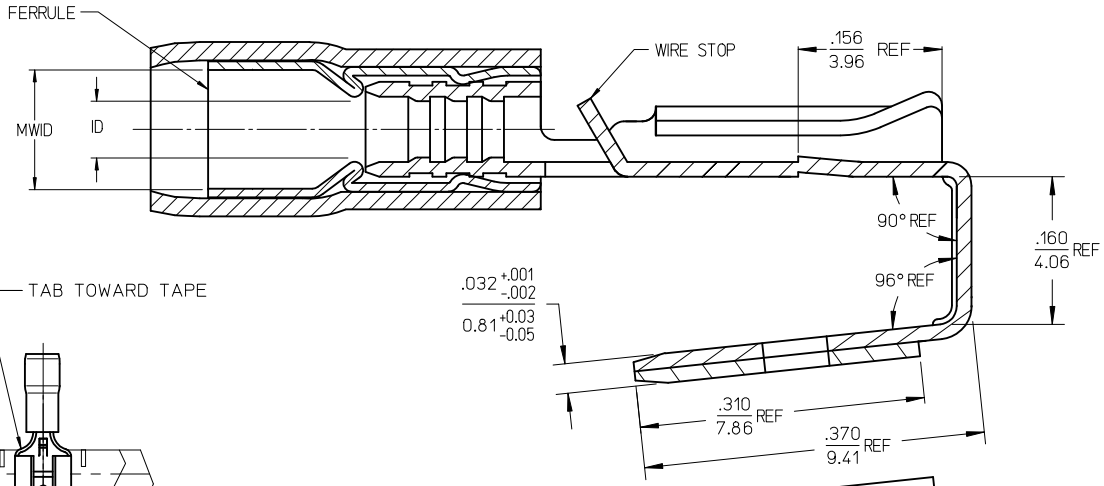

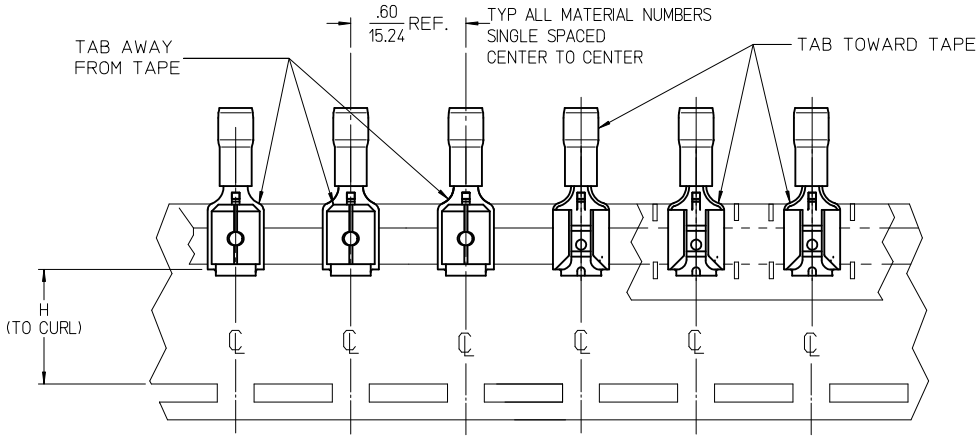

PARTS ON TAPE
(SCALE 2:1)

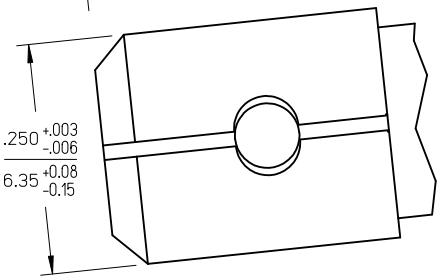

NOTES:

1. TERMINAL MATERIAL: BRASS
2. TERMINAL FINISH: TIN PLATED
3. INSULATOR MATERIAL: NYLON
4. FERRULE MATERIAL: COPPER ALLOY (F)
5. FERRULE FINISH: TIN PLATED
6. MWID = MAXIMUM WIRE INSULATION DIAMETER.
7. ASSEMBLY IS ROHS COMPLIANT.

FERRULE MATERIAL DESCR
EC NO: WNA2009-0510
DRWN:ETHRODAHL 2010/01/04
CHKD:JMACNEIL 2010/01/05
APPR:JMACNEIL 2010/01/05
DESCRIPTION
REV

QUALITY SYMBOLS
▼=0
▽(C)=0

GENERAL TOLERANCES (UNLESS SPECIFIED)

	mm	INCH
4 PLACES	± ---	± ---
3 PLACES	± ---	± .005
2 PLACES	± 0.13	± .01
1 PLACE	± 0.25	± ---
ANGULAR ± 5 °		

DRAFT WHERE APPLICABLE MUST REMAIN WITHIN DIMENSIONS

DIMENSION STYLE: IN/MM
SCALE: ---
DESIGN UNITS: INCH
THIRD ANGLE PROJECTION

		DATE
DRAWN BY	JH	1996/03/19
CHECKED BY	RWD	1996/03/19
APPROVED BY	RWD	1996/03/19

TITLE: PIGGYBACK QD, .250 X .032 TAB, AVIKRIMP

molex MOLEX INCORPORATED

MATERIAL NO.: SEE CHART
DOCUMENT NO.: SD-19012-001
SHEET NO.: 1 OF 1
SIZE: C

THIS DRAWING CONTAINS INFORMATION THAT IS PROPRIETARY TO MOLEX INCORPORATED AND SHOULD NOT BE USED WITHOUT WRITTEN PERMISSION