THIS DRAWING IS UNPUBLISHED. RELEASED FOR PUBLICATION -,- .
© COPYRIGHT 2011 BY TYCO ELECTRONICS CORPORATION. ALL RIGHTS RESERVED.

| LOC | DIST |
|---|---|
| DW | — |

REVISIONS

| P | LTR | DESCRIPTION | DATE | DWN | APVD |
|---|---|---|---|---|---|
| | B | REVISED (ECR-12-008086)<br>REVISED CAVITY DEPTH OF PACKAGE TO 7.0mm | 02MAY'12 | E.L. | W.K. |

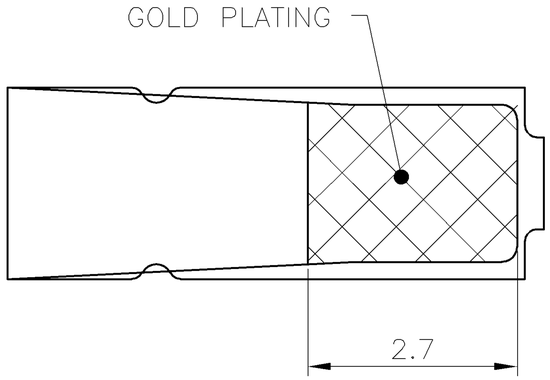


NOTES :

1. MATERIAL :
   COPPER ALLOY, 0.15±0.01MM THK
2. FINISH :
   GOLD FLASH PLATING ON THE CONTACT AREA.
   2.54um[100u"] MIN. MATTE-TIN PLATING ON THE FOOT AREA.
   1.27um[50u"] NICKEL UNDERPLATING OVERALL.
3. REFLOW SOLDER CAPABLE TO 260°C
   PER TE SPEC. 109-201, CONDITION B.

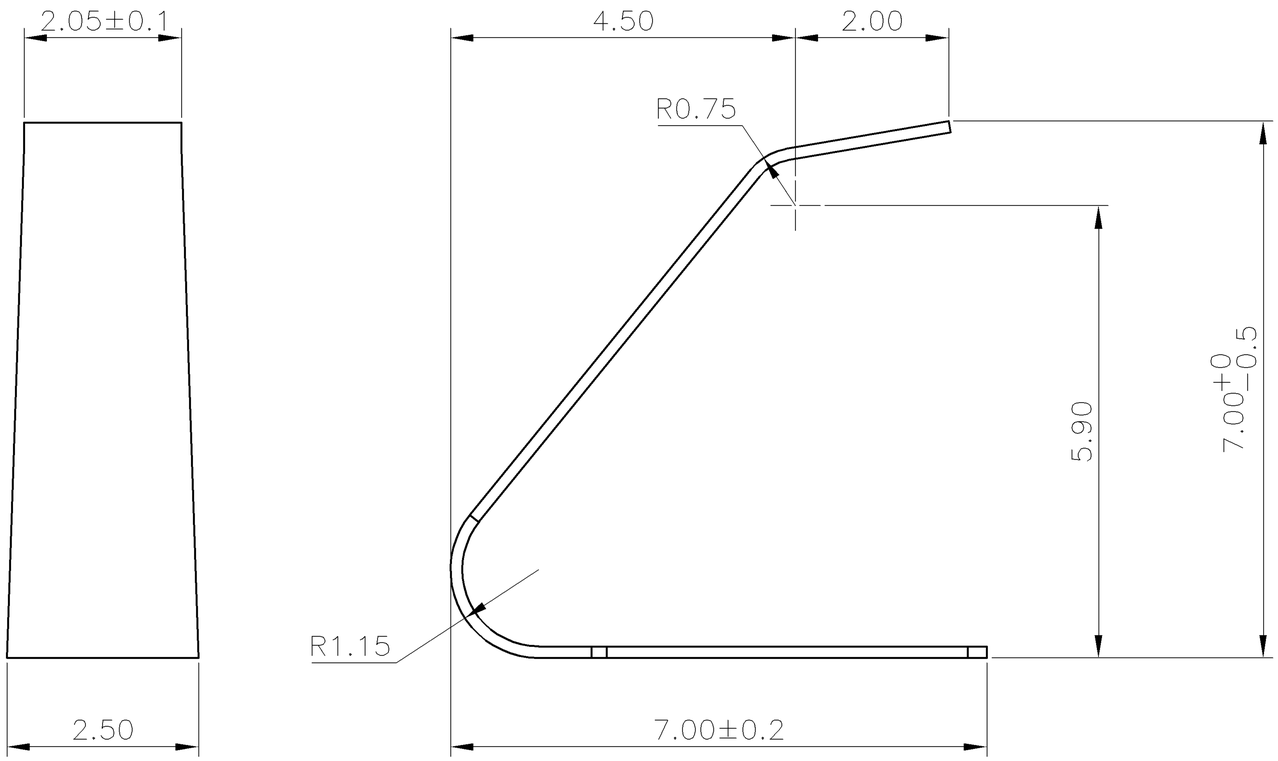


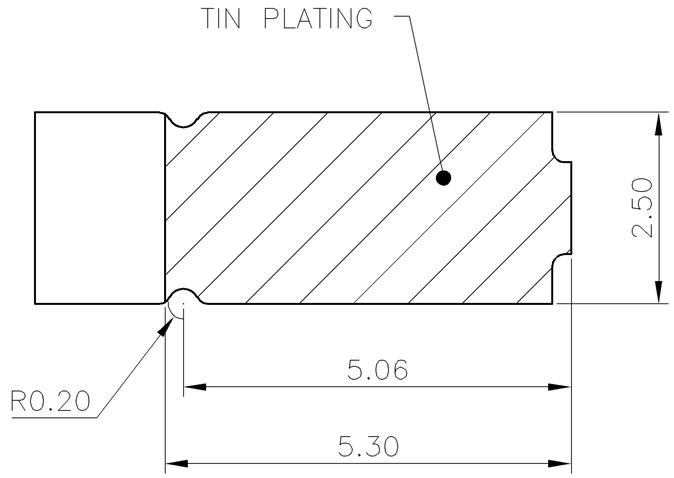


RECOMMENDED FOOT PRINT
REFERENCE ONLY

1734298-1
PART NUMBER

THIS DRAWING IS A CONTROLLED DOCUMENT.

DIMENSIONS: mm

TOLERANCES UNLESS OTHERWISE SPECIFIED:

| | |
|---|---|
| 0 PLC | ± – |
| 1 PLC | ± 0.3 |
| 2 PLC | ± 0.2 |
| 3 PLC | ± 0.15 |
| 4 PLC | ± – |
| ANGLES | ± 3° |

MATERIAL: SEE NOTE
FINISH: SEE NOTE

DWN E. LIU 24JUN2009
CHK S. CHIEN 24JUN2009
APVD W. KODAMA 24JUN2009
PRODUCT SPEC 108-57765
APPLICATION SPEC —
WEIGHT 0.0005 GRAMS

TE Connectivity

NAME: SHIELD FINGER 6525

| SIZE | CAGE CODE | DRAWING NO | RESTRICTED TO |
|---|---|---|---|
| A3 | 00779 | C-1734298 | — |

CUSTOMER DRAWING | SCALE — | SHEET 1 OF 2 | REV B

THIS DRAWING IS UNPUBLISHED. RELEASED FOR PUBLICATION -,- .
© COPYRIGHT 2011 BY TYCO ELECTRONICS CORPORATION. ALL RIGHTS RESERVED.

| LOC | DIST |
|---|---|
| DW | — |

REVISIONS

| P | LTR | DESCRIPTION | DATE | DWN | APVD |
|---|---|---|---|---|---|
| | | SEE SHEET 1. | | | |

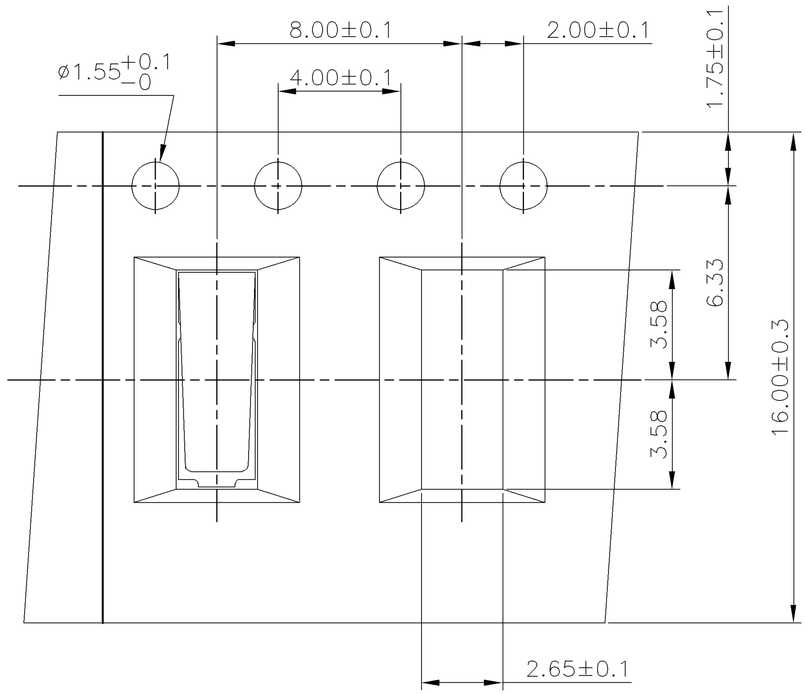


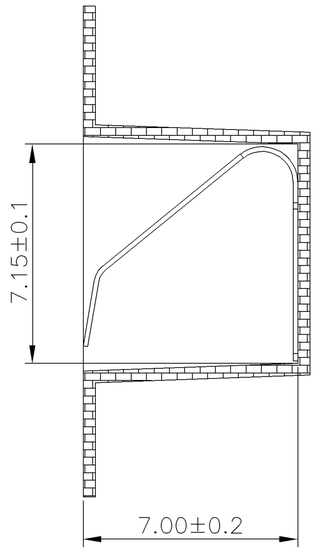


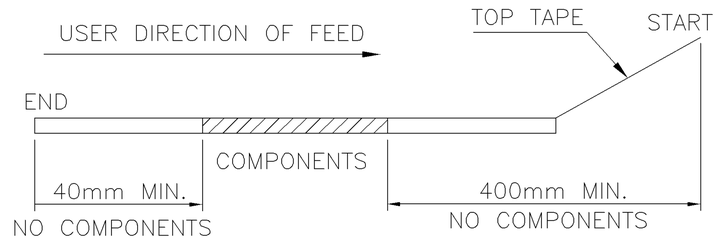


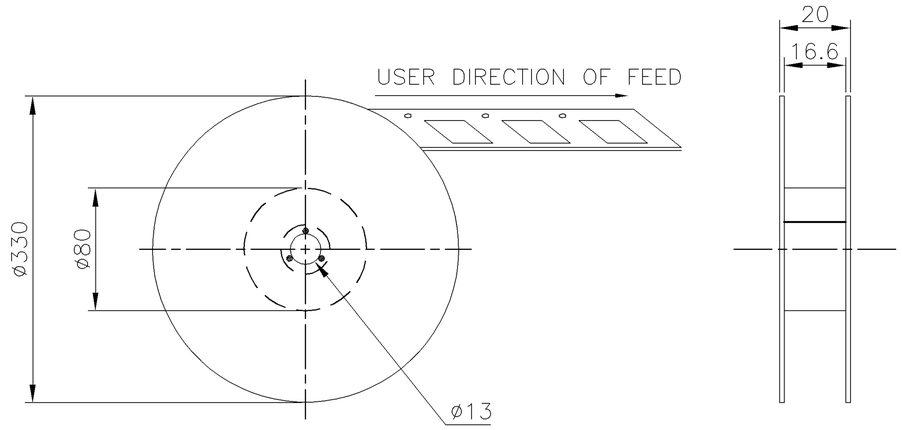


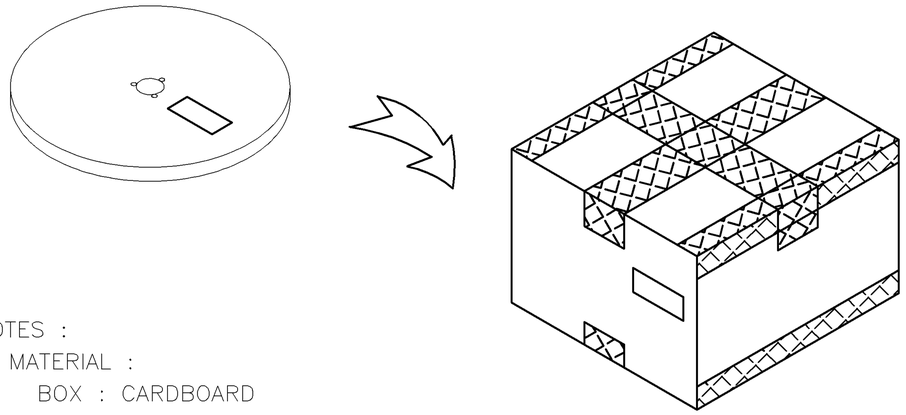

NOTES :
1. MATERIAL :
   BOX : CARDBOARD
   CARRIER TAPE : PS
   TOP TAPE : PET
   REEL : PS
2. DIMENSION :
   REEL : SEE DRAWING
   BOX : 345X345X240
3. QUANTITY : SEE TABLE
4. WEIGHT : SEE TABLE
5. PEELING RESISTANCE : 10g~70g
6. PEELING SPEED : 300mm/MINUTES

| 5.61Kg | 0.062Kg | 1200 | 10 | 12000 PCS |
|---|---|---|---|---|
| GROSS WEIGHT | NET WEIGHT | PCS/REEI | REEI /CARTON | QUANTITY |

THIS DRAWING IS A CONTROLLED DOCUMENT.

DIMENSIONS: mm

TOLERANCES UNLESS OTHERWISE SPECIFIED:

| | |
|---|---|
| 0 PLC | ± – |
| 1 PLC | ± 0.3 |
| 2 PLC | ± 0.2 |
| 3 PLC | ± 0.15 |
| 4 PLC | ± – |
| ANGLES | ± 3° |

MATERIAL –

FINISH –

DWN –
CHK –
APVD –
PRODUCT SPEC –
APPLICATION SPEC –
WEIGHT –

TE Connectivity

NAME: SHIELD FINGER 6525

| SIZE | CAGE CODE | DRAWING NO | RESTRICTED TO |
|---|---|---|---|
| A3 | 00779 | C-1734298 | — |

CUSTOMER DRAWING | SCALE — | SHEET 2 OF 2 | REV B