Square Body Fuse Links

Size 1* to 3, Flush End Contact, 170M Series
690Vac (IEC), 700Vac (UL), 40 to 2000A

Specifications

Description
Square body flush end contact high speed fuse links, for the protection of DC common bus, DC drives, power converters/rectifiers and reduced voltage starters.

Technical Data
Rated Voltage: see table
Rated Current: 40-2000A
Breaking Capacity: 200kA RMS Sym.

Operating Class: aR

Standards/Agency Information
CE, Designed and tested to IEC 60269 Part 4. Consult Cooper Bussmann for UL Recognition, CSA Component Acceptance Status and CCC approvals.

Dimensions - mm

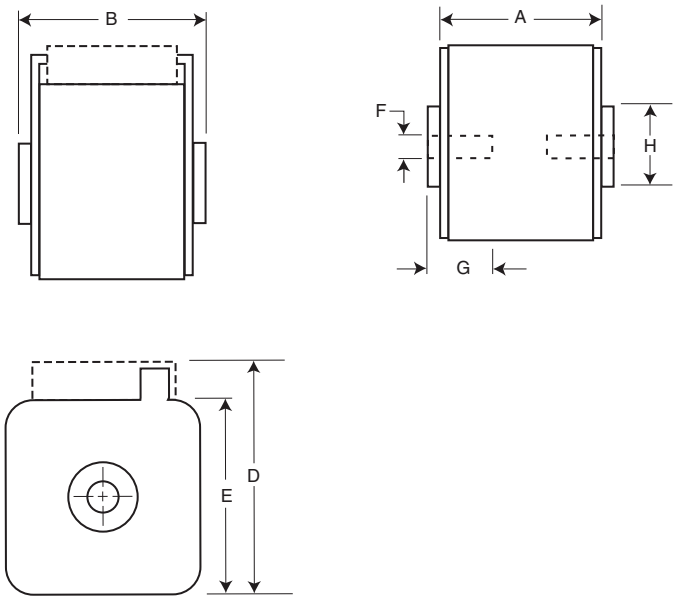

Type -B/-, -BKN/-, -G/-, -GKN/-

Size	A	B	D[3]	E	F	F[1] (in)	G	H
1*	50	51	59	45	M8	5/16" -18 UNC-2B	5	N17
1	50	51	69	53	M8	5/16" -18 UNC-2B	8	N20
2	50	51[2]	77	61	M10	3/8" -16 UNC-2B	10	N24
3	51	53[2]	92	76	M12	1/2" -13 UNC-2B	10	N30

[1] Valid for fuse links type -G- & -GKN/.
[2] B = 65 for size 2 1100 and 1250A / size 3 from 1600 to 2000A.
[3] Valid for fuse links type -BKN/ and -GKN/.

Data Sheets: 170K6314 (Size 1*), 170K6316 (Size 1), 170K6318 (Size 2), 170K6320 (Size 3)

Square Body Fuse Links

Size 1* to 3, Flush End Contact, 170M Series
690Vac (IEC), 700Vac (UL), 40 to 2000A

Catalogue Numbers

-B/- Visual Indicator	-BKN/- Type K Indicator for Micro	-G/- Visual Indicator	-GKN/- Type K Indicator for Micro	Fuse Link Size	Rated Voltage	Rated Current (Amps)	I²t (A² Sec) Pre-Arcing	I²t (A² Sec) Clearing at 660Vac	Watts Loss (W)
170M3408	170M3458	170M3508	170M3558	1*	690Vac (IEC) 700Vac (UL)	40	40	270	9
170M3409	170M3459	170M3509	170M3559			50	77	515	11
170M3410	170M3460	170M3510	170M3560			63	115	770	14
170M3411	170M3461	170M3511	170M3561			80	185	1250	18
170M3412	170M3462	170M3512	170M3562			100	360	2450	21
170M3413	170M3463	170M3513	170M3563			125	550	3700	26
170M3414	170M3464	170M3514	170M3564			160	1100	7500	30
170M3415	170M3465	170M3515	170M3565			200	2200	15,000	35
170M3416	170M3466	170M3516	170M3566			250	4200	28,500	40
170M3417	170M3467	170M3517	170M3567			315	7000	46,500	50
170M3418	170M3468	170M3518	170M3568			350	10,000	68,500	55
170M3419	170M3469	170M3519	170M3569			400	15,000	105,000	60
170M3420	170M3470	170M3520	170M3570			450	21,000	140,000	65
170M3421	170M3471	170M3521	170M3571			500	27,000	180,000	70
170M3422	170M3472	170M3522	170M3572			550	34,000	230,000	75
170M3423	170M3473	170M3523	170M3573			630	48,500	325,000	80
170M4408	170M4458	170M4508	170M4558	1		200	1650	11,500	45
170M4409	170M4459	170M4509	170M4559			250	3100	21,000	55
170M4410	170M4460	170M4510	170M4560			315	6200	42,000	58
170M4411	170M4461	170M4511	170M4561			350	8500	59,000	60
170M4412	170M4462	170M4512	170M4562			400	13,500	91,500	65
170M4413	170M4463	170M4513	170M4563			450	17,000	120,000	70
170M4414	170M4464	170M4514	170M4564			500	25,000	170,000	72
170M4415	170M4465	170M4515	170M4565			550	34,000	230,000	75
170M4416	170M4466	170M4516	170M4566			630	52,000	350,000	80
170M4417	170M4467	170M4517	170M4567			700	69,500	465,000	85
170M4418	170M4468	170M4518	170M4568			800	105,000	725,000	95
170M4419	170M4469	170M4519	170M4569		550Vac (IEC)	900	155,000	850,000	100
170M5408	170M5458	170M5508	170M5558	2	690Vac (IEC) 700Vac (UL)	400	11,000	74,000	65
170M5409	170M5459	170M5509	170M5559			450	15,500	105,000	70
170M5410	170M5460	170M5510	170M5560			500	21,500	145,000	75
170M5411	170M5461	170M5511	170M5561			550	28,000	190,000	80
170M5412	170M5462	170M5512	170M5562			630	41,000	275,000	90
170M5413	170M5463	170M5513	170M5563			700	60,500	405,000	95
170M5414	170M5464	170M5514	170M5564			800	86,000	575,000	105
170M5415	170M5465	170M5515	170M5565			900	125,000	840,000	110
170M5416	170M5466	170M5516	170M5566			1000	180,000	1,250,000	115
170M5417	170M5467	170M5517	170M5567		600Vac (IEC) 700Vac (UL)	1100	245,000	1,600,000	120
170M5418	170M5468	170M5518	170M5568			1250	365,000	2,400,000	130
170M6408	170M6458	170M6508	170M6558	3	690Vac (IEC) 700Vac (UL)	500	14,000	95,000	95
170M6409	170M6459	170M6509	170M6559			550	19,500	135,000	100
170M6410	170M6460	170M6510	170M6560			630	31,000	210,000	105
170M6411	170M6461	170M6511	170M6561			700	44,500	300,000	110
170M6412	170M6462	170M6512	170M6562			800	69,500	465,000	115
170M6413	170M6463	170M6513	170M6563			900	100,000	670,000	120
170M6414	170M6464	170M6514	170M6564			1000	140,000	945,000	125
170M6415	170M6465	170M6515	170M6565			1100	190,000	1,300,000	130
170M6416	170M6466	170M6516	170M6566			1250	290,000	1,950,000	140
170M6417	170M6467	170M6517	170M6567			1400	370,000	2,450,000	155
170M6418	170M6468	170M6518	170M6568			1500	460,000	3,100,000	160
170M6419	170M6469	170M6519	170M6569			1600	580,000	3,900,000	160
170M6420	170M6470	170M6520	170M6570		600Vac (IEC)/500Vac (UL)	1800	880,000	5,250,000	165
170M6421	170M6471	170M6521	170M6571		550Vac (IEC)/500Vac (UL)	2000	1,150,000	6,350,000	175

Data Sheets: 170K6314 (Size 1*), 170K6316 (Size 1), 170K6318 (Size 2), 170K6320 (Size 3)