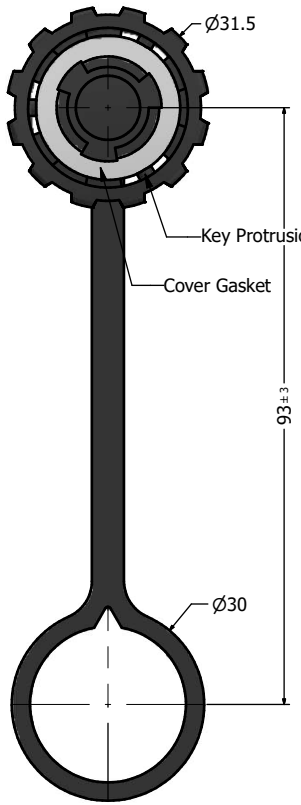

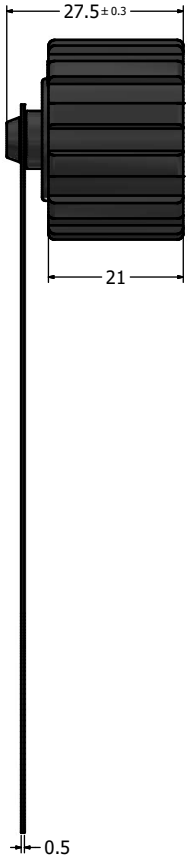

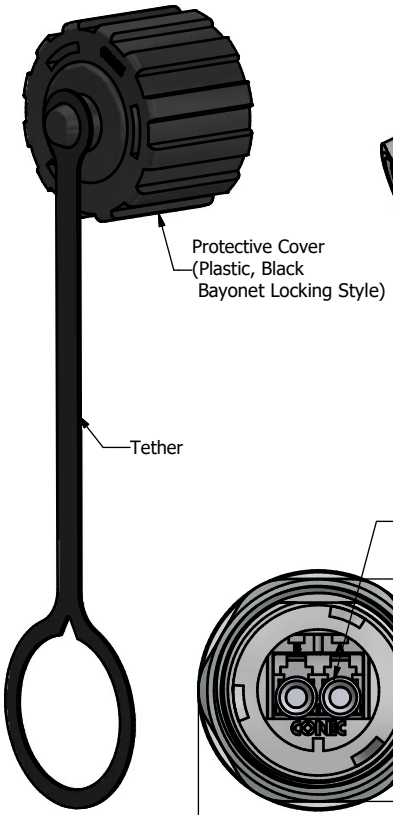

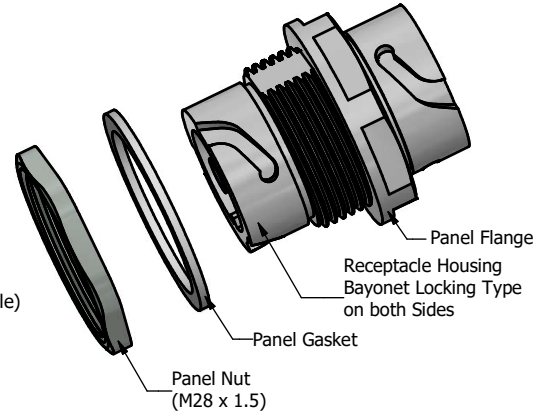

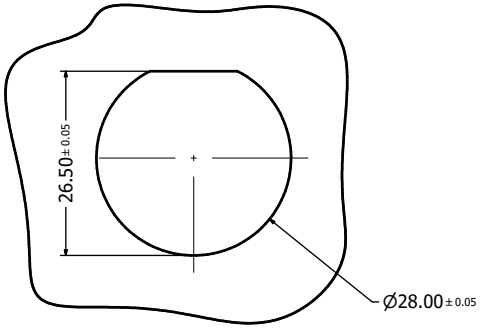

Recommended Panel Cutout

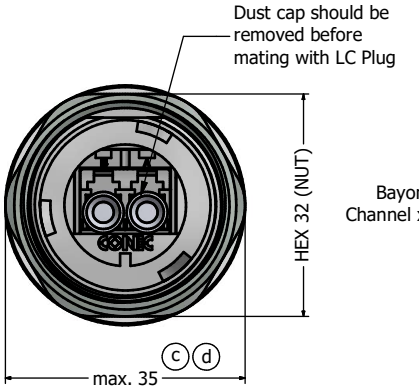

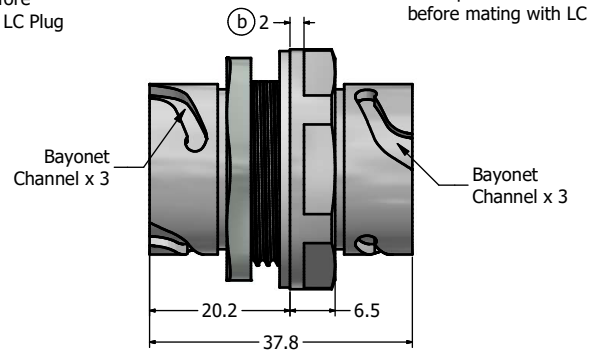

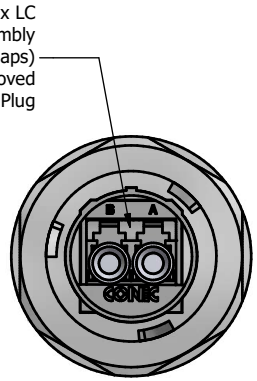

Notes:

1. Material and Finish:
   - Receptacle Housing and Cover: Polyester (Black), UL94 V-0 or ABS, Nickel Plated, UL94 V-0
   - b Panel Nut: Brass, Finish: Nickel Plated
   - Panel and Cover Gasket: Silicone, Color: White
   - Tether: Polycarbonate, Color: Black

   Duplex LC Adaptor Assembly:
   - Housing: Mod. PPO , UL94 V-0, Color: **SM Blue/MM Beige/APC SM Green**
   - Alignment Sleeves: SM Ceramic/MM Phosphor Bronze
   - Dust Cap: PP, Color: Neutral transparent
   - Operating Temperature: -40˚C to +85˚C
2. Connector can be mounted to a maximum panel thickness of 3.2mm.
3. IP67 rated when covered or fully mated with the appropriate mating connector
4. c Recommaned Mounting Panel Nut torque is 20 to 25 lb-inch

RoHS compliant

b

Description	Plastic Version	Metallized Version
Single Mode (SM)	17-300820	17-300940
Multi Mode (MM)	17-300830	17-300950
APC Single Mode (APC SM)	17-300840	17-300960

THIS DRAWING MAY NOT BE COPIED OR REPRODUCED IN ANY FORM OR MADE PASSED ON TO A THIRD PARTY WITHOUT WRITTEN PERMISSION. OWNERSHIP AND COPYRIGHT OF CONEC CORPORATION

DOT NOT ALTER CAD DRAWING BY HAND

Customer:

Name	Title	Approval Date

Rev.	Changes	Date	Name
1 x d	Ä21-0426	03.11.2021	Bub
c	3 x c	Sep/25/2013	Vincent Ke
b	3 x b	Jan/18/2013	Vincent Ke
a	original		

Tolerance
Unless otherwise specified
c
0 PLC ± 0.50
1 PLC ± 0.38
2 PLC ± 0.25
3 PLC ± 0.10
ANGLES ± 3˚

Autodesk Inventor

	Date	Name
2012		
Draw.	Sept. 28	Vincent Ke
Appd.	Sept. 28	J. Chaudry
Norm		
D-old		

CONEC®

Scale: Dim. in mm

Material: See Notes

Title: IP67 Industrial Duplex LC Receptacle + Cover Assembly Kit
Plastic Version with bayonet on both sides

Drawing No.: 17K1A335

DIN A3

Part No.: SEE PART NUMBER TABLE

Sheet 1/1