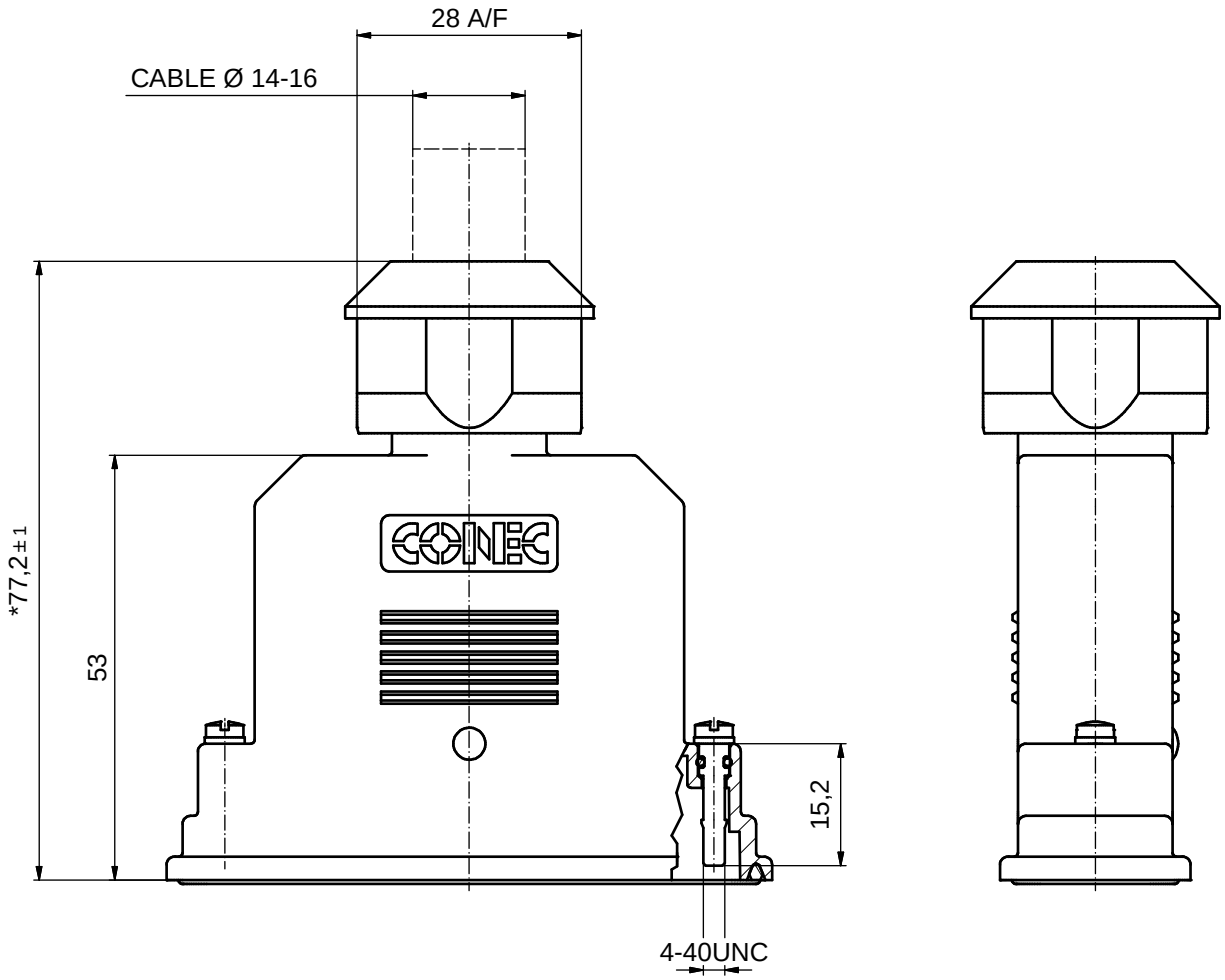

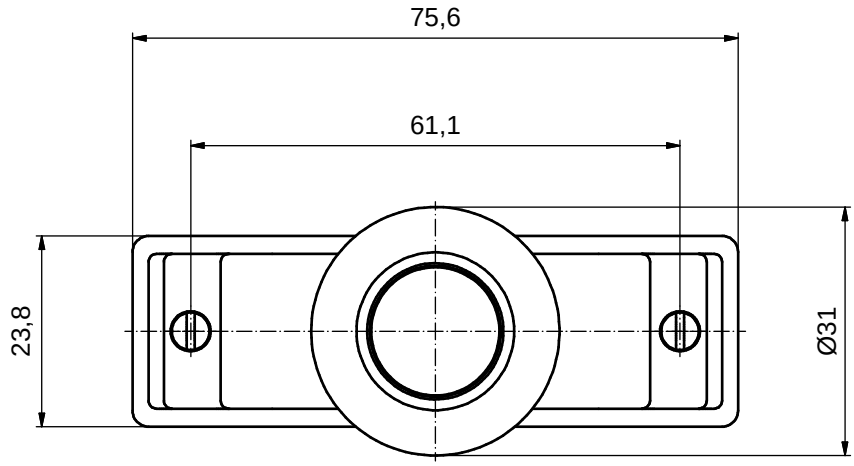

NOTES:

1. MATERIALS:
   HOOD, GLAND, COMPR.-RING: ABS UL94 V-0 METALLIZED
   FRONTSEALING: SILICONE VMQ BLUE
   CABLE SEALING: NBR BLACK
   JACK-SCREW: STAINLESS STEEL
   O-RING: NBR BLACK
   CABLE STRAIN RELIEF: STEEL, NI-PLATED
   SCREWS: STEEL, NI-PLATED
   SHIELDING BRACKET: CU-ALLOY, NI-PLATED
2. TEMPERATURE RANGE: -30°C TO +80°C
3. RECOMMENDED TORQUE FOR SCREW:
   35Ncm (3.1 in.LB)
   MAX. TORQUE: 68Ncm (6 in.LB)
4. SINGLE PACKED

* COMPLETELY TIGHTENED

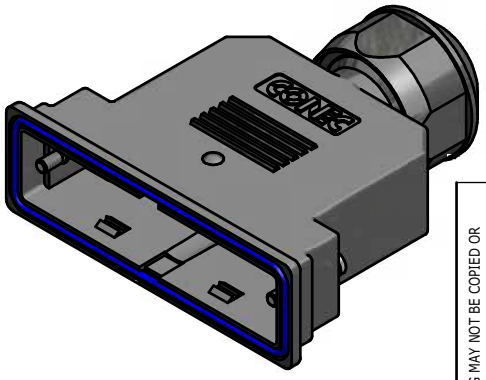

Directive 2002/95/EC RoHS compliant

THIS DRAWING MAY NOT BE COPIED OR REPRODUCED IN ANY WAY, AND MAY NOT BE PASSED ON TO A THIRD PARTY WITHOUT WRITTEN PERMISSION. OWNERSHIP AND COPYRIGHT OF CONEC GmbH

DO NOT ALTER CAD DRAWING BY HAND

rev.	description	date	name
1 x b	Ä 5093	12.03.14	Heinrich
a	Origin		

tolerance ±0,3 unless otherw. specified — dim. in mm

	date	name
drawn	07.02.2014	Heinrich
appd.	07.02.2014	Huether
norm		
d-old		

CONEC®

scale: 1,5:1 (1:1)
material: SEE NOTES

title:
WATER RESISTANT D-SUB HOOD
SHIELDED 50 POS.
SHORT SCREW 4-40UNC STAINLESS STEEL

dwg no: 15K1A1446 — DIN-A3 — sh: 1

part no: 15-004850