THIS DRAWING IS UNPUBLISHED. RELEASED FOR PUBLICATION -,- .
© COPYRIGHT - BY TYCO ELECTRONICS CORPORATION. ALL INTERNATIONAL RIGHTS RESERVED.

LOC	DIST
H	—

REVISIONS

P	LTR	DESCRIPTION	DATE	DWN	APVD
	A	WO 00/7012	20-07-09	—	VS
	B	SR10-0250-02	24-05-02	—	BC
	B1	ECR-09-015706	24-11-09	AEG	MKO

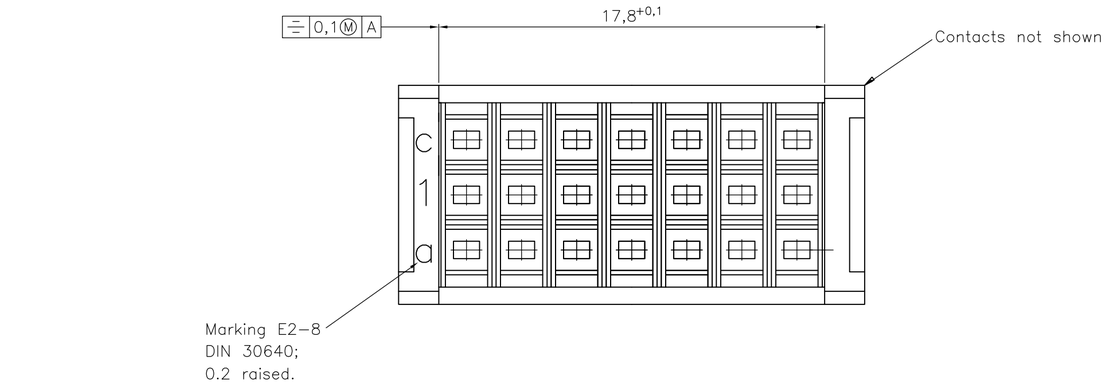

Solderpost

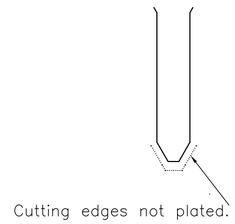

Loading Pattern (18 contacts)

	1	2	3	4	5	6	7
Row a	+	+	+	o	+	+	+
Row b	+	+	+	o	+	+	+
Row c	+	+	+	o	+	+	+

\+ = contact
o = no contact

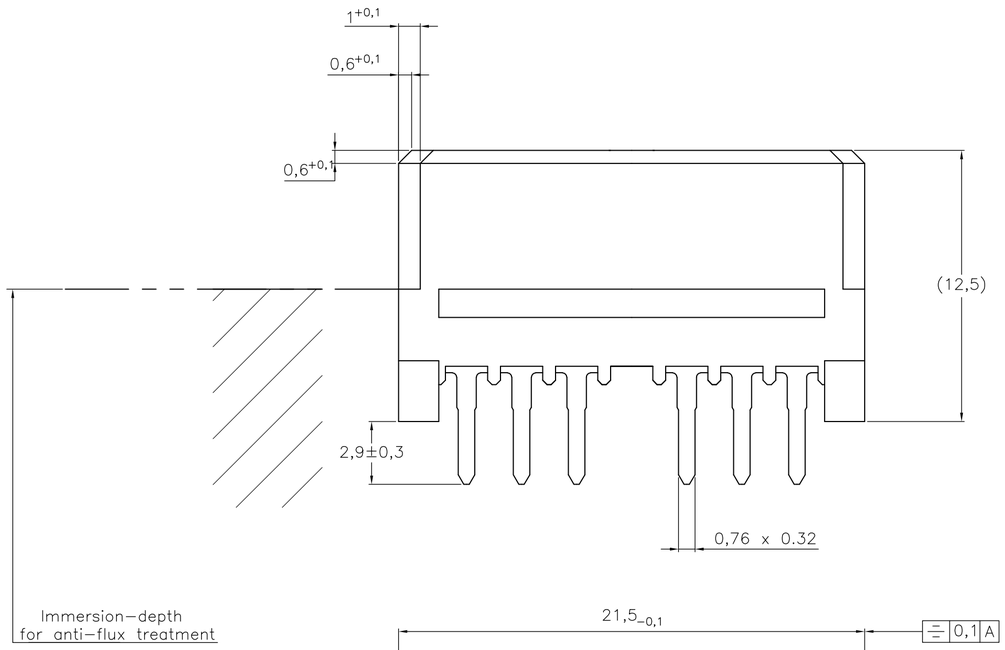

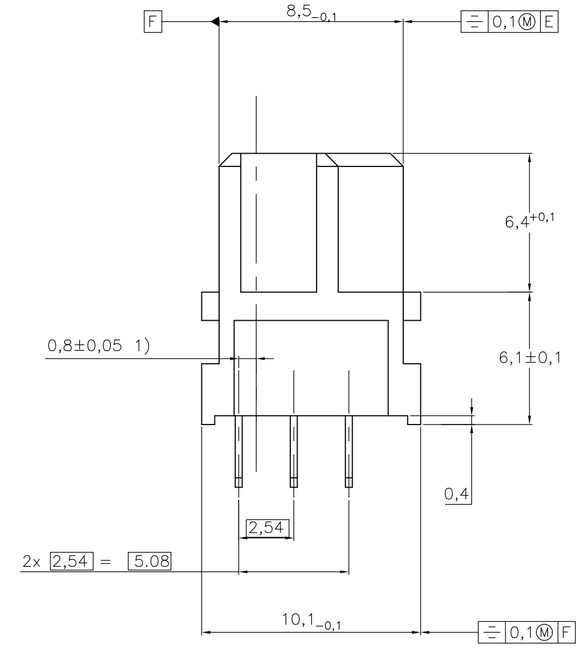

Specifications acc. IEC 603-2. Performance Level 2

Housing :	PBTP 30% Glasfilled (UL94-V0) Pebblegrey similar RAL 7032
Contact material :	Copper Alloy
Plating :	Contact area : PdNi+Au or Au Termination area : Sn with flux-thight coating.

1) Center-displacement between termination- and contact-side.

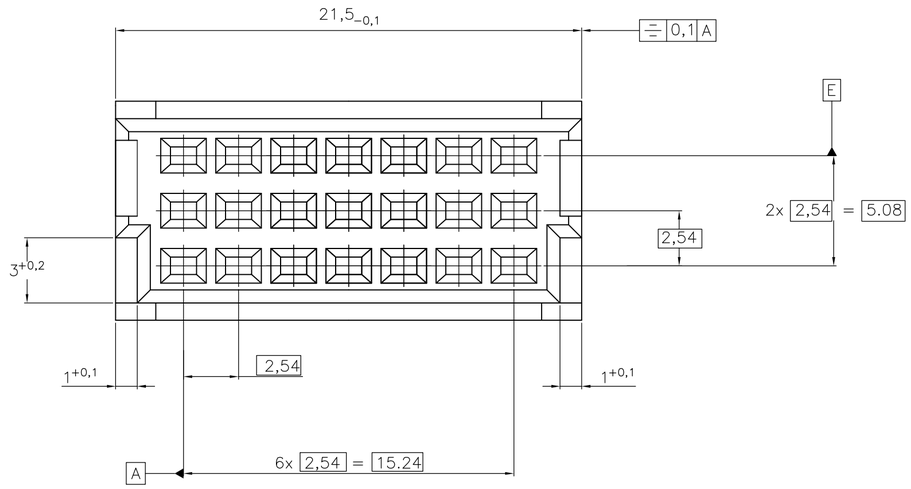

Active Partnumber. Contact Tyco Electronics for other configuration availability

Old Partnumber	TE Part number
V42254-F2299-R6	1393657-4

THIS DRAWING IS A CONTROLLED DOCUMENT.

DIMENSIONS: mm

TOLERANCES UNLESS OTHERWISE SPECIFIED:
0 PLC ± -
1 PLC ± -
2 PLC ± -
3 PLC ± -
4 PLC ± -
ANGLES ± -

MATERIAL -
FINISH -

DWN Cuvelier 10JUN98
CHK —
APVD PD COM
PRODUCT SPEC —
APPLICATION SPEC —
WEIGHT —

Tyco Electronics
Tyco Electronics Corporation
's-Hertogenbosch, Nederland

NAME
Receptacle Ass'y, Type R, 21 pos.
V42254-F2299-R6-*-26

SIZE	CAGE CODE	DRAWING NO	RESTRICTED TO
A2	00779	C-1393657-4	—

CUSTOMER DRAWING
SCALE 5:1;10:1 SHEET 1 OF 1 REV B1

1393657-4