This document was generated on 10/03/2012

PLEASE CHECK WWW.MOLEX.COM FOR LATEST PART INFORMATION

Part Number: 130068-0039
Status: Active
Overview: Brad® Quick-Change® Connectors
Description: BradPower™ Quick-Change® 3 Pole Tee with 3 Pole Mini-Change® Drop Cable, Length 1.0m Cable, 16 AWG

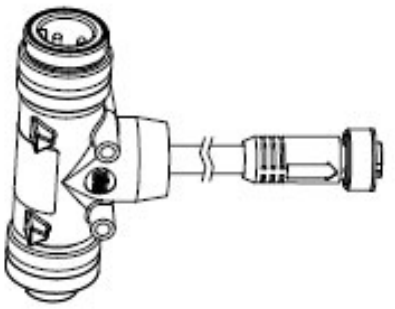

Series image - Reference only

Documents:
Drawing (PDF)
RoHS Certificate of Compliance (PDF)

Agency Certification

UL	E258922

General

Product Family	Industrial Tees and Splitters
Series	130068
IP Rating	IP67
Overview	Brad® Quick-Change® Connectors
Product Name	Quick-Change®
Type	Power Tap Tee
UPC	78678802494

Physical

Color - Cable Jacket	Gray
Drop Connector	Mini-Change®
Drop Gender	Female
Keyway	Single
Left Trunk Connector	Quick-Change®
Left Trunk Gender	Female
Leg 1 Length	N/A
Leg 2 Length	N/A
Material - Cable Jacket	PVC
Material - Connector Body	PVC
Material - Coupling Nut	Anodized Aluminum
Net Weight	298.690/g
Poles	3
Right Trunk Connector	Quick-Change®
Right Trunk Gender	Male
Temperature Range - Operating	-20°C to +90°C

Electrical

Current - Maximum per Contact	13A, 30A
Voltage - Maximum	600V AC/DC

Material Info

Old Part Number	TC30200A45M010

Reference - Drawing Numbers

Sales Drawing	SD-130068-013

EU RoHS
RoHS Compliant by Exemption
REACH SVHC
Not Reviewed
Low-Halogen Status
Not Reviewed

China RoHS

Need more information on product environmental compliance?

Email productcompliance@molex.com
For a multiple part number RoHS Certificate of Compliance, click here

Please visit the Contact Us section for any non-product compliance questions.

Search Parts in this Series
130068Series

This document was generated on 10/03/2012

PLEASE CHECK WWW.MOLEX.COM FOR LATEST PART INFORMATION