PART NO.	ENGINEERING NO.	FINISHED LENGTH
1300060726	104000A01F0301	3FT [0.9M]
1300060752	104000A01F3001	30FT [9.1M]
1300062412	104000A01M3051	30.5M [100FT]

B

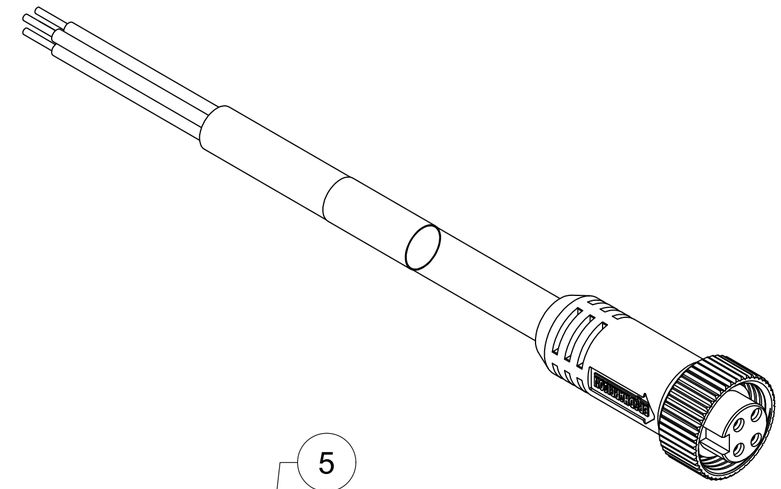

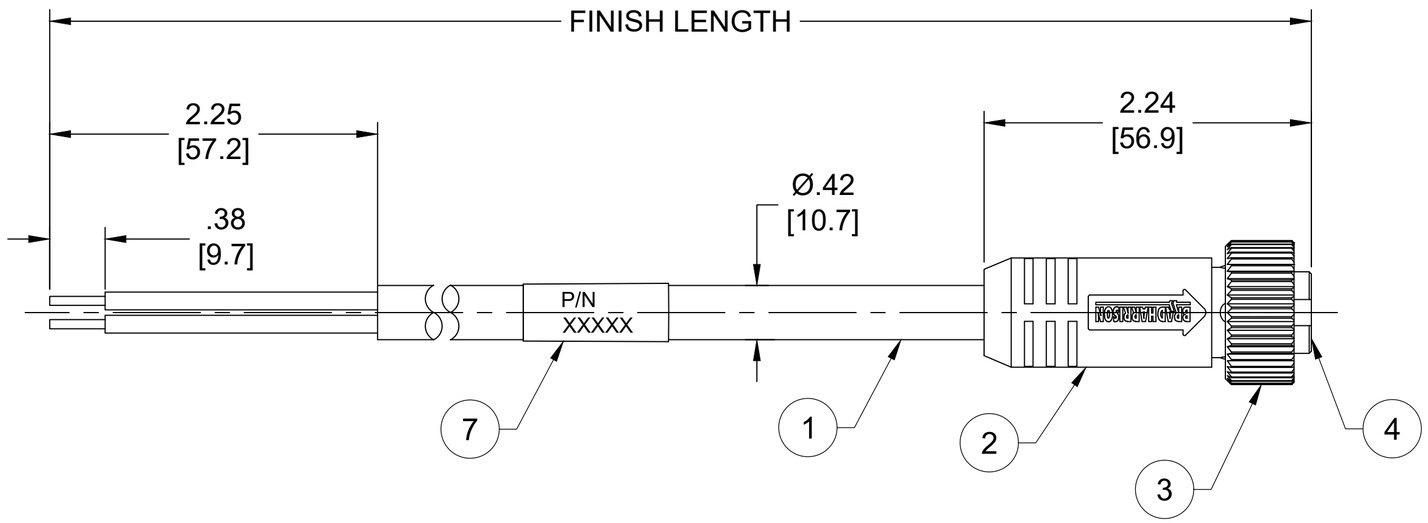

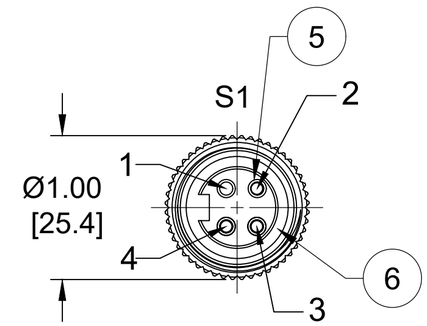

FEMALE FACE VIEW

NOTES:
1. MATERIAL: AS NOTED
2. FINISH: AS NOTED
3. ELECTRICAL:
   VOLTAGE : 483V PER IEC 60664 B
   600V PER UL 2238
   CURRENT: 10A
4. TEMP RATING: -20° TO +105°C
5. PROTECTION: IP67 (WHEN MATED)
6. COUPLING THREAD: 7/8"-16UN
7. UL RECOGNIZED FILE: E152210
   CSA CERTIFIED FILE: LR6837
8. ALL DIMENSIONS ARE FOR REFERENCE UNLESS TOLERANCED OR NOTED OTHERWISE

B

PART NUMBER LEGEND

104000A01F0301

CABLE LENGTH
F050 = 5 FEET
F100 = 10 FEET
F500 = 50 FEET

M005 = 0.5 METER
M010 = 1 METER
M100 = 10 METER

S1

BLACK	1
WHITE	2
RED	3
GREEN/YELLOW-GND	4

WIRING DIAGRAM

B

CABLE LENGTH TOLERANCES
<.3M [1FT]: +19mm-0 [+.75in-0]
.3 - .9M [1 - 3FT]: +44.5mm-0 [+1.75in-0]
.9 - 1.8M [3 - 6FT]: +55.6mm-0 [+2.19in-0]
1.8 - 3.7M [6 - 12FT: +88.9mm-0 [+3.50in-0]
3.7 - 7.3M [12 - 24FT]: +165.1mm-0 [+6.50in-0]
7.3-14.6M [24 - 48FT]: +317.5mm-0 [+12.50in-0]
14.6 - 30.5M [48-100FT]: +622.3mm-0 [+24.50in-0]
OVER 30M [100FT] +2% OF FINISHED LENGTH

ITEM	COMPONENT	MATERIAL	FINISH	
7	WRAP LABEL	VINYL	BLACK/YELLOW	B
6	FRICTION RING	NYLON	WHITE	B
5	CONTACT SOCKET	COPPER ALLOY	GOLD OVER NICKEL	
4	INSERT	TPE	YELLOW	B
3	COUPLING NUT	STAINLESS STEEL	PASSIVATED	
2	OVERMOLD	TPE	YELLOW	B
1	CABLE, 16 AWG STOOW/ST	PVC	YELLOW	

THIS DRAWING CONTAINS INFORMATION THAT IS PROPRIETARY TO MOLEX ELECTRONIC TECHNOLOGIES, LLC AND SHOULD NOT BE USED WITHOUT WRITTEN PERMISSION

FUNCTIONAL SYMBOLS: FA=0, FC=0, FP=0
DIVISIONAL SYMBOLS

DIMENSION UNITS: INCH/MM
SCALE: NTS

GENERAL TOLERANCES (UNLESS SPECIFIED)

	mm	INCH
4 PLACES	±----	±----
3 PLACES	±----	±----
2 PLACES	±----	±----
1 PLACE	±----	±----
0 PLACES	±----	±----
ANGULAR TOL ± ---- °		

DRAFT WHERE APPLICABLE MUST REMAIN WITHIN DIMENSIONS

CURRENT REV DESC: ITEM# 2 & 4 WERE PVC. ITEM #7 WAS PLASTIC FILM. ADDED ITEM #6, IEC VOLTAGE, PN MATRIX & TOL CHART. MODIFIED PN CHART.

EC NO: 698916
DRWN: ABENJAMINLW 2021/05/20
CHK'D: RSTONE 2022/03/09
APPR: BWOODMAN 2022/03/11

INITIAL REVISION:
DRWN: BWOODMAN 2009/12/28
APPR: JFMURPHY 2010/01/05

molex

MINI-CHANGE CORDSET, A-SIZE
4-POLE, FEMALE, STRAIGHT, SINGLE KEY,
#16 AWG

PRODUCT CUSTOMER DRAWING

DOCUMENT NUMBER	DOC TYPE	DOC PART	REVISION
SD-130006-025	PSD	001	B

THIRD ANGLE PROJECTION	DRAWING	SERIES	MATERIAL NUMBER	CUSTOMER	SHEET NUMBER
	C-SIZE	130006	SEE CHART	GENERAL MARKET	1 OF 1

DOCUMENT STATUS	P1	RELEASE DATE	2022/03/11 14:29:42

FORMAT: IN-CAD-tb-prod-C
REVISION: B
DATE: 2020/01/14