Part Number: 121013-0199

Status: Active

Overview: Brad® mPm® DIN Valve Connectors

Description: Brad® mPm® DIN Valve Connector, Type A, B28 Base, 2 Pole UL94-V0, NBR Flat Gasket and Screws, Black

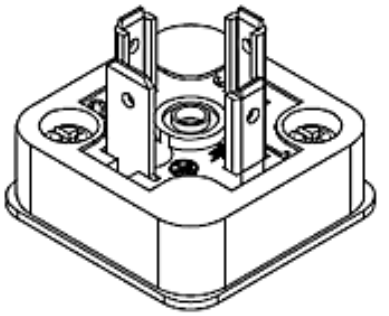

Series

image - Reference only

Documents:

Drawing (PDF)
Packaging Specification PK-121012-B28 (PDF)
Test Summary STR-1467 (PDF)
RoHS Certificate of Compliance (PDF)

General

Product Family	Field Attachable / Accessories
Series	121013
IP Rating	IP67
Overview	Brad® mPm® DIN Valve Connectors
Product Name	mPm®
Type	Field Attachable Connector
UPC	78172503074

Physical

Cable Diameter	N/A
Coupling Type	N/A
Diagnostics / LEDs	No
Diagnostics Port	No
Gender	N/A
Keyway	None
Material - Connector Body	Polypropylene
Material - Contact	Brass
Material - Coupling Nut	N/A
Material - Plating Mating	Silver
Net Weight	10.627/g
Orientation	90° Angle
Poles	4
Temperature Range - Operating	-25°C to +75°C
Wire Size AWG	N/A

Electrical

Current - Maximum per Contact	16A
Voltage - Maximum	250V AC/DC

Material Info

Old Part Number	B282000W2SA

Reference - Drawing Numbers

Packaging Specification	PK-121012-B28
Sales Drawing	SD-121012-003
Test Summary	STR-1467

EU RoHS
RoHS Compliant by Exemption
REACH SVHC
Not Reviewed
Low-Halogen Status
Not Reviewed

China RoHS

Need more information on product environmental compliance?

Email productcompliance@molex.com
For a multiple part number RoHS Certificate of Compliance, click here

Please visit the Contact Us section for any non-product compliance questions.

Search Parts in this Series
121013Series