Part Number: 121012-0175

Status: Active

Overview: Brad® mPm® DIN Valve Connectors

Description: Brad® mPm® DIN Valve Connector, Type 2, B26 Base, 3 Pole UL94-V0, Flat Gasket and Screws

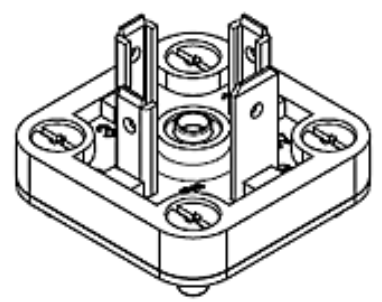

Series

image - Reference only

Documents:

Drawing (PDF)
Packaging Specification PK-121012-B26 (PDF)
Test Summary STR-1467 (PDF)
RoHS Certificate of Compliance (PDF)

General

Product Family	Field Attachable / Accessories
Series	121012
IP Rating	IP67
Overview	Brad® mPm® DIN Valve Connectors
Product Name	mPm®
Type	Field Attachable Connector
UPC	78172537161

Physical

Cable Diameter	N/A
Coupling Type	N/A
Diagnostics / LEDs	No
Diagnostics Port	No
Gender	N/A
Keyway	None
Material - Connector Body	Polypropylene
Material - Contact	Brass
Material - Coupling Nut	N/A
Material - Plating Mating	Silver
Net Weight	12.243/g
Orientation	90° Angle
Poles	3
Temperature Range - Operating	-40°C to +90°C
Wire Size AWG	N/A

Electrical

Current - Maximum per Contact	16A
Voltage - Maximum	250V AC/DC

Material Info

Old Part Number	B263000W2SA

Reference - Drawing Numbers

Packaging Specification	PK-121012-B26
Sales Drawing	SD-121012-002
Test Summary	STR-1467

EU RoHS
RoHS Compliant by Exemption

China RoHS
50
Pb

REACH SVHC
Not Reviewed

Low-Halogen Status
Low-Halogen

Need more information on product environmental compliance?

Email productcompliance@molex.com
For a multiple part number RoHS Certificate of Compliance, click here

Please visit the Contact Us section for any non-product compliance questions.

Search Parts in this Series
121012Series