A01 - ADAPTOR FOR DIN MICRO

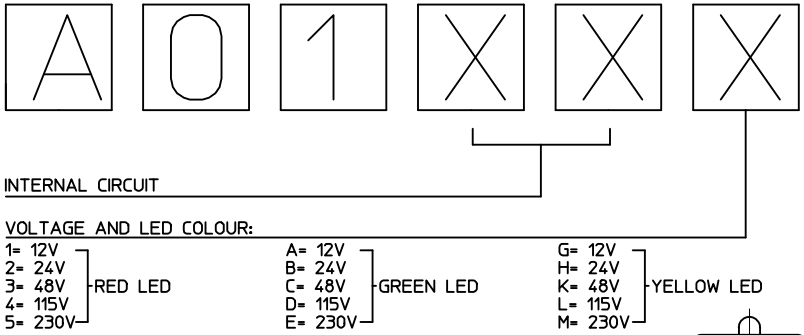

Chart 1

Engineering number	SAP Part Number	Circuit type	LED Color
A01A1H	1210010008	A1 24V	Yellow
A01A1L	1210010421	A1 115V	Yellow
A01C3H	1210010014	C3 24V	Yellow
A01C3L	1210010431	C3 115V	Yellow
A01C42	1210010016	C4 24V	Red
A01C44	1210010018	C4 115V	Red
A01C45	1210010436	C4 230V	Red
A01C4B	1210010020	C4 24V	Green
A01C4H	1210010024	C4 24V	Yellow
A01C4L	1210010025	C4 115V	Yellow
A01C4M	1210010406	C4 230V	Yellow
A01S0H	1210010405	S0 24V	Yellow

Wiring configuration

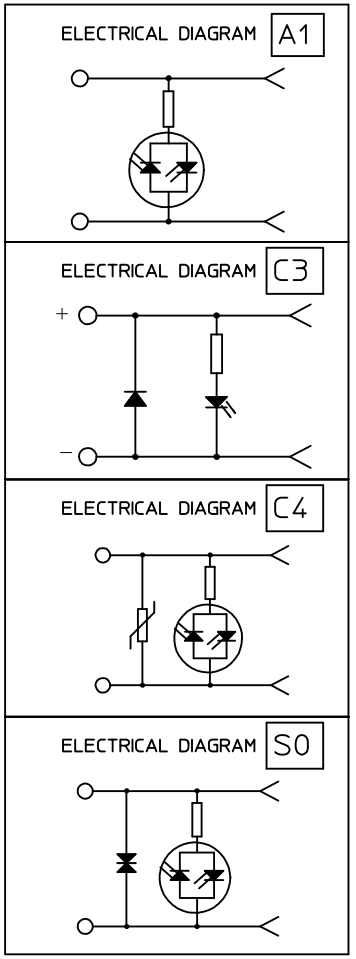

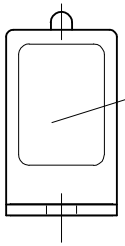

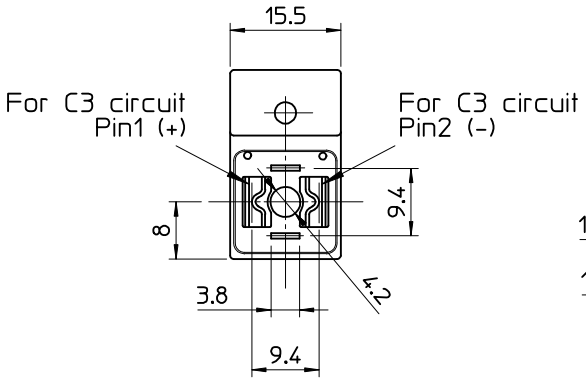

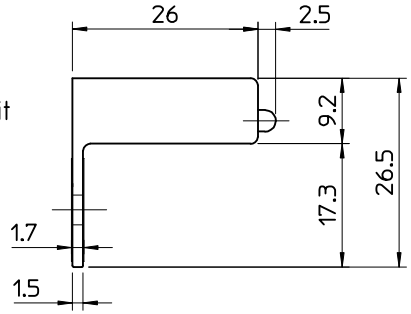

ORIGINAL RELEASE EC NO: IPG2013-1225 DRWN:JMARSZALEK 2013/02/08 CH'KD:MSZWAJKOWSKI 2013/02/08 APPR:MIWASIECZKO 2013/02/12 DESCRIPTION	QUALITY SYMBOLS ▼=0 C=0	GENERAL TOLERANCES (UNLESS SPECIFIED) mm / INCH 4 PLACES ± --- / ± --- 3 PLACES ± --- / ± --- 2 PLACES ± --- / ± --- 1 PLACE ± --- / ± --- 0 PLACE ± --- / ± --- ANGULAR ±---°	DIMENSION STYLE MM ONLY	SCALE -	DESIGN UNITS METRIC	FIRST ANGLE PROJECTION
			DRAWN BY JMARSZALEK DATE 2013/02/08 CHECKED BY MSZWAJKOWSKI DATE 2013/02/08 APPROVED BY MIWASIECZKO DATE 2013/02/12	TITLE LIGHT ADAPTORS SERIES A01XXX		
				molex		
			MATERIAL NO. SEE CHART 1	DOCUMENT NO. SD-121001-001		SHEET NO. 1 OF 1
A REV		DRAFT WHERE APPLICABLE MUST REMAIN WITHIN DIMENSIONS	SIZE A4	THIS DRAWING CONTAINS INFORMATION THAT IS PROPRIETARY TO MOLEX INCORPORATED AND SHOULD NOT BE USED WITHOUT WRITTEN PERMISSION		