SYMBOL DEFINITION		
A DIMENSION WITHOUT AN INSPECTION REPORT SYMBOL ( ) DOES NOT REQUIRE INSPECTION. IT MAY BE CONTROLLED ON THE INDIVIDUAL COMPONENT DRAWING.	TOTAL NO OF INSPECTIONS REQUIRED	36
	LAST NO. USED	32

MISSING SYMBOLS
NO MISSING SYMBOL NUMBER

DWG STATUS					ZONE	REVISION HISTORY	AUTH	DR	APVD 1	APVD 2
DATE	STG	REV	N/P	CHG						
14MR05	R	A4	-	-		CLEARED REV COL, REDRAWN TO PD, REMOVED MAT'L NOTE, ADDED PROCESSING NOTES AND MAT'L SPEC	265839	JOA	JAA	WLM

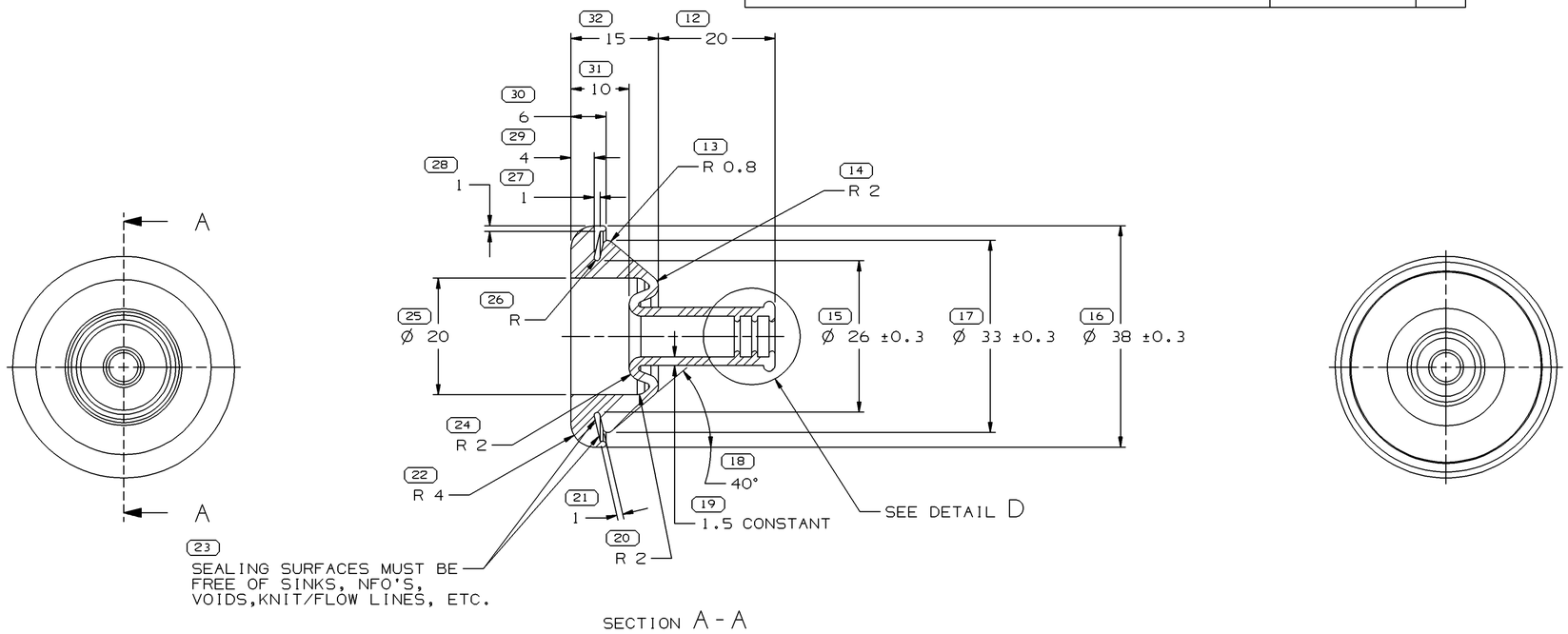

SECTION A - A

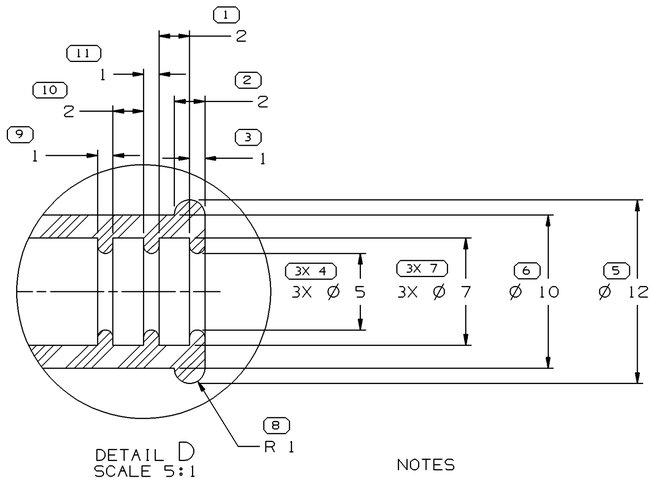

DETAIL D
SCALE 5:1

PROCESSING NOTES

1. THE FOLLOWING NUMBER IS TO BE PUT ON THE PRODUCT DRAWING AS THE MAXIMUM ALLOWABLE STRETCH DIMENSION: 20MM AS MEASURED IN THE FOLLOWING FASHION:

MAXIMUM ALLOWABLE DIMENSION OF STRETCHED GROMMET NECK WHEN USING A 4 BILL SPREADER

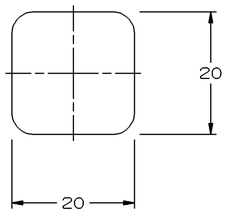

NOTES

1. UNLESS OTHERWISE SPECIFIED AND/OR INDICATED:

   DIMENSIONS ARE TO FACE OF VIEW SHOWN AND AUTOMATICALLY ROUNDED BY COMPUTER FOR INSPECTION (SEE MATH MODEL FOR PRECISE DIMENSIONS). FOR ALL OTHER DIMENSIONS NOT SHOWN BUT REQUIRED FOR TOOL BUILD, SEE MATH MODEL FOR PRECISE TOOL PATH DATA. DRAFT IS 1° MAX ON ALL OUTSIDE SURFACES

2. THIS PART IS NOT CONTROLLED FOR AUTOMATIC FEEDING.
3. PART IS SYMMETRICAL ABOUT CENTERLINES EXCEPT AS NOTED.
4. THIS GROMMET TO BE USED WITH HARNESS BUNDLE SMOOTH TAPE WRAPPED USING 5 MIL TAPE HAVING NO SLITS ON EDGES.

(17) PROCESS SENSITIVE DIMENSION

DIMENSIONS ENCLOSED IN ( ) INDICATE REFERENCE DIMENSIONS AND NO TOLERANCE LIMITS ARE ESTABLISHED

DIMENSIONAL RANGE (MM)				CHART C
FROM	> 0	>25	>60	>80
TO	25	60	80	
TOLERANCE UNLESS OTHERWISE SPECIFIED				
	±0.3	±0.5	±0.6	±0.75%
ANGULAR TOLERANCE ±2°				

DWG TYPE: PART DRAWING

STYLE

VOLUME (CM³): 7.869

DISTR CODE

UNLESS OTHERWISE SPECIFIED

THIS DOCUMENT IS IN ACCORDANCE WITH ASME Y14.5M-1994 AS AMENDED BY THE GM GLOBAL DIMENSIONING AND TOLERANCING ADDENDUM-2001. SEPARATE PATTERNS OF FEATURES MAY BE GAGED SEPARATELY REGARDLESS OF DATUM REFERENCES.

ALL DIMENSIONS ARE IN MILLIMETERS

REFERENCE

THIRD ANGLE PROJECTION

DO NOT SCALE

USE MATH DATA

CAD UG UNIGRAPHICS

DELPHI

DELPHI PACKARD ELECTRIC SYSTEMS
WARREN, OH

		DATE
DR		
APVD1	TERRY MARRIE	12JL88
APVD2	D. STEELE	13JL88
APVD3	B. ADDUCI	21JL88
APVD4		
APVD5		

SUBSTANCES OF CONCERN AND RECYCLED CONTENT PER DELPHI 10949001

MATERIAL
M4433002

DRAWING NAME
GROM

DRAWING NUMBER
12084971

SIZE	SCALE	FRAME NO	SHEET NO	STG	REV	N/P
A1	2:1	1 OF 1	1 OF 1	R	A4	-