THIS DRAWING AND DESIGN THEREON CONSTITUTES A PROPRIETARY DESIGN OF PACKARD ELECTRIC DIVISION AND IS NOT TO BE DUPLICATED OR REPRODUCED WITHOUT AUTHORITY OF PACKARD ELECTRIC DIVISION.

DO NOT SCALE

PART NO. 1206 4907

PART NO. 1206 4907

DATE	SYM	REVISION RECORD	AUTHORITY	DR	CK
20JA88	—	ALL PARTS-REDRAWN WITH NO			
		PHYSICAL CHANGE-NO REV UPDATE			
		REQ'D.	880507	JN	DKS
20JA86	—	ALL PARTS - ADDED 5.92 REF & 1.45			
		DIMS; REVISED SECTION A-A			
		NO REV UPDATE REQ'D	117893	JN	DKS
20JA88	—	ALL PARTS-MAT'L SIZE WAS			
		0.41 X 11.10 AND MAT'L SPEC WAS			
		M-1519 - NO REV UPDATE REQ'D.	118107	JN	DKS
20JA88	—	12084688 & 12084689 RELEASED TO			
		REV. "A".	880005	JN	DKS
29AU88	—	ALL PARTS-ADDED "PED" STAMP ON			
		BLANK VIEW, ADDED PILOT HOLE TO			
		CARRIER STRIP, MADE DIMS. "REF" IN			
		CARRIER STRIP VIEW. NO REV. UPDATE			
		REQUIRED.	121697	CB	BAR
05JA89	—	ALL PARTS - ADDED 5.88±0.10 DIM &			
		SNOWCONE #1; REVISED KNURL VIEW - NO			
		REV UPDATE REQ'D	123110	CH	CDH
19NO90	—	ALL PARTS - 5.92±0.10 WAS 5.88±0.10			
		& 7.65 WAS 7.60 - NO REV UPDATE			
		REQ'D	138516	BAR	BAR
11MR91	—	12124033 - RELEASED TO "A"	910005	GC	GC
25NO91	--	12124369- RELEASED TO REV "A"	910005	TLM	TLM
07AU92		12064904 & 12084688 - "G" DIM WAS			
		16.51 & "H" DIM WAS 8.26 - REV			
		LEVELS ADVANCED	151104	TMP	TMP
11NO93	—	12124033 - OBSOLETE - NO REV UPDATE			
		REQ'D	930003	RLB	RLB
27SE94	—	12084689 - CORRECTED REV LEVEL TO			
		TO "A" - NO REV UPDATE REQ'D	163077	RLB	RLB

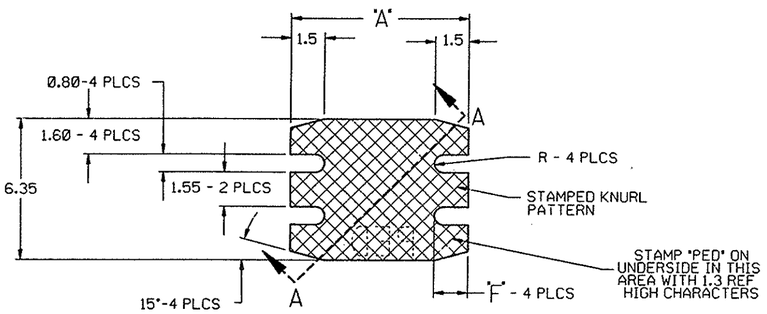

BLANK VIEW - APPROXIMATE

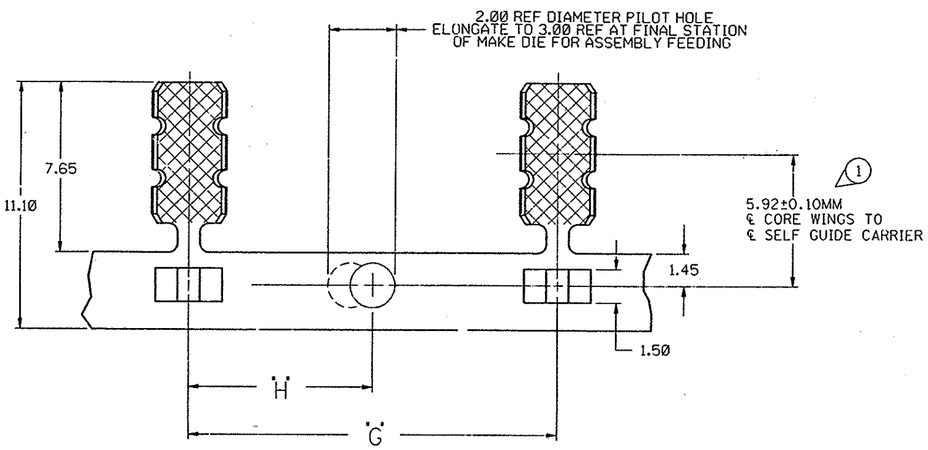

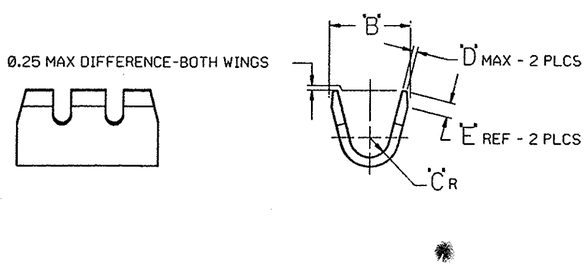

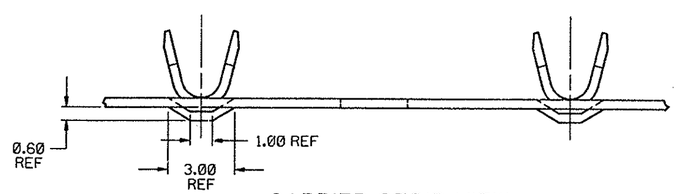

CARRIER STRIP VIEW

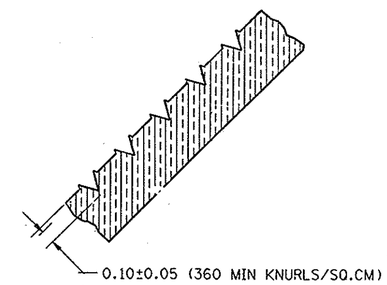

SECTION A-A

SCALE 50:1

WARNING
GEOMETRY MAY NOT BE DRAWN TO SCALE

NOTE — 1. A 0.40 R. IS PERMISSIBLE ON ALL SHARP CORNERS UNLESS OTHERWISE SPECIFIED.

2. " ⌀" DENOTES DIMENSIONS AND CHARACTERISTICS THAT ARE IMPORTANT TO THE FUNCTION AND/OR PROCESSING OF THE PART. IT DOES NOT NECESSARILY INDICATE AN SPC DIMENSION. THIS DRAWING HAS 1 SNOWCONE.

UNPLATED					PLATED											
PART NO.	REV	STATUS	MAT'L SIZE	SPEC	PART NO.	REV	STATUS	SPEC	A ±0.25	B ±0.25	C	D MAX.	E REF.	F	G	H
			0.406 X 11.13		12124369	A		P1519386	5.30	2.40	0.50	0.35	0.76	1.00	9.42	4.71
			0.406 X 11.13	S1519386	12124033	A	OBSOLETE	P1519386	5.30	2.40	0.50	0.35	0.76	1.00	16.51	8.26
12064906	B		0.406 X 11.13	S1519386					15.08	5.84	1.98	0.35	0.76	2.00	16.51	8.26
12064905	B		0.406 X 11.13	S1519386	12084689	A		P1519386	11.12	4.57	1.39	0.35	0.76	2.00	16.51	8.26
12064904	C		0.406 X 11.13	S1519386	12084688	B		P1519386	7.92	3.68	0.88	0.35	0.76	1.52	9.42	4.71

PED/INTERGRAPH EMS

FILE SPEC: ****USER**** DGN:SPECIFICATION:********** *****SYTIME******

THIRD ANGLE PROJECTION

METRIC
DIMENSIONS ARE IN MILLIMETERS UNLESS OTHERWISE SPECIFIED.

CODE NO. 6900

TOLERANCE UNLESS OTHERWISE SPECIFIED
DECIMAL: ONE PLACE ± 0.3 TWO PLACE ± 0.15 ANGULAR ± 2°

O.C. -C-1241

DWG. DATE 090C85 SCALE 8:1

DR. JAY M. NEFF 20JA88

EST. NO.

CK. D. STEELE DATE 09MR88

REFERENCE NO.

APPR. S. M. KIM DATE 15MR88

APPR. DATE

MATERIAL SPEC. SEE DRAWING

NAME SPLICE CLIP

PART NO. 1206 4907 SIZE D

PACKARD ELECTRIC

PACKARD ELECTRIC DIVISION
GENERAL MOTORS CORPORATION
WARREN, OHIO

-0-
75V