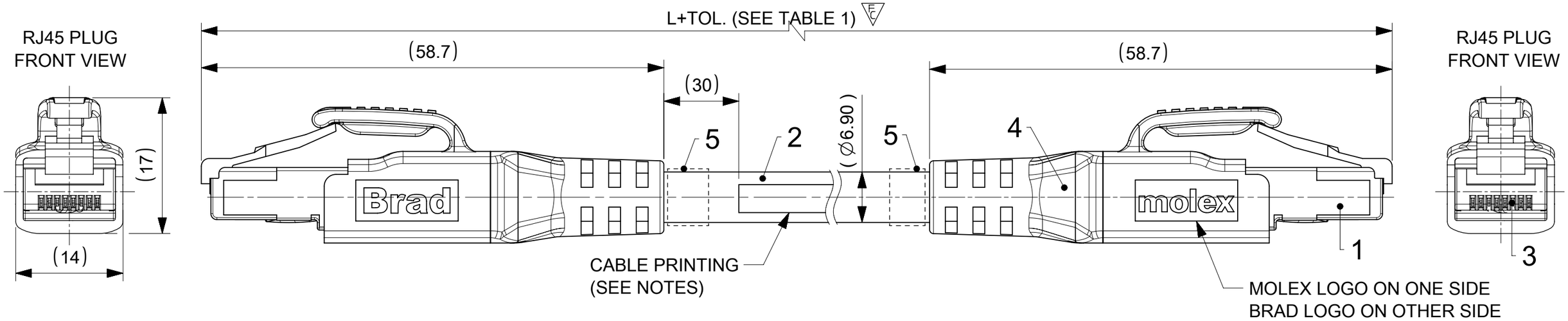


WIRING DIAGRAM

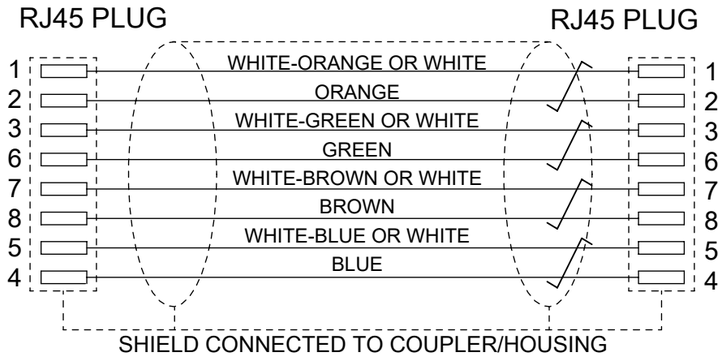


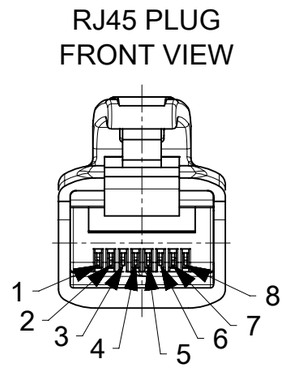


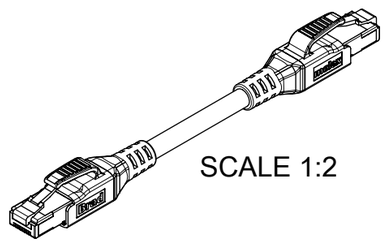


NOTES:
VOLTAGE RATING: 30 V A.C. OR 42 V D.C.
CURRENT RATING: 0.5 A
TEMPERATURE RATING:
STATIC: -40 °C TO 80 °C
DYNAMIC: -20 °C TO 80 °C
IP RATING: IP 20
TRANSMISSION CHARACTERISTICS ACCORDING TO ISO 11801 CLASS $E_A$ CHANNEL

CABLE PRINTING:
[MOLEX ETHERNET CABLE CAT6A 4x2x26] [MX PN] [(MX OLD ENG NO)] [DATE CODE]
i.e. MOLEX ETHERNET CABLE CAT6A 4x2x26 1203410960(E66E06020M200) MX1922
PACKAGING: CORDSETS ARE PACKED IN A POLYBAG

TABLE 1

| MOLEX PN | ENGINEERING NO. | DESCRIPTION | LENGTH |
|---|---|---|---|
| 1203410960 | E66E06020M200 | CSE RJ45 CAT6A 8P 0C FE STR PUR 20M | 20000 |
| 1203410961 | E66E06020M300 | CSE RJ45 CAT6A 8P 0C FE STR PUR 30M | 30000 |
| 1203410962 | E66E06020M400 | CSE RJ45 CAT6A 8P 0C FE STR PUR 40M | 40000 |
| 1203410963 | E66E06020M500 | CSE RJ45 CAT6A 8P 0C FE STR PUR 50M | 50000 |
| 1203410964 | E66E06020M600 | CSE RJ45 CAT6A 8P 0C FE STR PUR 60M | 60000 |
| 1203410965 | E66E06020M700 | CSE RJ45 CAT6A 8P 0C FE STR PUR 70M | 70000 |
| 1203410966 | E66E06020M800 | CSE RJ45 CAT6A 8P 0C FE STR PUR 80M | 80000 |
| WITH ID CARRIER | | | |
| 1203410967 | E66E06020M030H | CSE RJ45 CAT6A 8P 0C FE STR PUR 3M-ID | 3000 |
| 1203410971 | E66E06020M060H | CSE RJ45 CAT6A 8P 0C FE STR PUR 6M-ID | 6000 |
| 1203410970 | E66E06020M080H | CSE RJ45 CAT6A 8P 0C FE STR PUR 8M-ID | 8000 |
| 1203410969 | E66E06020M170H | CSE RJ45 CAT6A 8P 0C FE STR PUR 17M-ID | 17000 |
| 1203410973 | E66E06020M250H | CSE RJ45 CAT6A 8P 0C FE STR PUR 25M-ID | 25000 |
| 1203410968 | E66E06020M460H | CSE RJ45 CAT6A 8P 0C FE STR PUR 46M-ID | 46000 |
| 1203410972 | E66E06020M530H | CSE RJ45 CAT6A 8P 0C FE STR PUR 53M-ID | 53000 |

BOM: * NOTE : ID CARRIER ONLY FOR ENGINEERING NUMBERS WITH THE SUFFIX "H" (SEE TABLE 1)

| ITEM | QTY | DESCRIPTION | MATERIAL | FINISH/COLOR |
|---|---|---|---|---|
| 1 | 2 | RJ45-PLUG 8P8C SHLD LONG BODY | - | - |
| 2 | - | CABLE 4X2X26/7AWG DIA 6.9 | PUR | GREEN Similar RAL6026 |
| 3 | 16 | CONTACT RJ45 | PHOSPHOR BRONZE | SELECTIVE Au PLATED |
| 4 | - | OVERMOLD | TPU | BLACK |
| 5 | 2 | I/D CARRIER 6-10mmx30mm | PVC | TRANSPARENT |

DOCUMENT STATUS | P1 | RELEASE DATE | 2021/08/10 14:50:32

CABLE LENGTH TOLERANCES

| LENGTH | TOLERANCE |
|---|---|
| 0 m - 1 m | +40 mm |
| >1 m - 5 m | +60 mm |
| >5 m - 10 m | +80 mm |
| >10 m - 20 m | +140 mm |
| >20 m - 30 m | +160 mm |
| >30 m | +1% length |

FUNCTIONAL SYMBOLS: FA = 0, FC = 1, FP = 0
DIVISIONAL SYMBOLS

THIS DRAWING CONTAINS INFORMATION THAT IS PROPRIETARY TO MOLEX ELECTRONIC TECHNOLOGIES, LLC AND SHOULD NOT BE USED WITHOUT WRITTEN PERMISSION

DIMENSION UNITS: mm | SCALE: 2:1
GENERAL TOLERANCES (UNLESS SPECIFIED)
ANGULAR TOL ± °
4 PLACES ±
3 PLACES ±
2 PLACES ±
1 PLACE ±
0 PLACES ±
DRAFT WHERE APPLICABLE MUST REMAIN WITHIN DIMENSIONS

CURRENT REV DESC: RJ45 REPLACED
EC NO: 672546
DRWN: RSCHIEBER 2021/08/04
CHK'D: RSILLER 2021/08/10
APPR: RSILLER 2021/08/10
INITIAL REVISION:
DRWN: MDHARMANTI 2021/05/20
APPR: RSILLER 2021/05/27

THIRD ANGLE PROJECTION | DRAWING: A3-SIZE | SERIES: 120341

molex

CSE RJ45 CAT6A 8P 0C FE STR PUR XM

PRODUCT CUSTOMER DRAWING

| DOCUMENT NUMBER | DOC TYPE | DOC PART | REVISION |
|---|---|---|---|
| 1203410960 | PSD | 000 | A1 |

| MATERIAL NUMBER | CUSTOMER | SHEET NUMBER |
|---|---|---|
| SEE TABLE 1 | GENERAL MARKET | 1 OF 1 |

FORMAT: master_Sealed-A3
REVISION: J
DATE: 2020/01/14