RACON 12 ST, THT inside, 3.6 ± 0.7 N, 1 NO

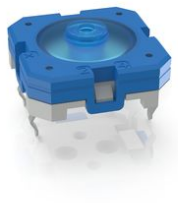

fields of application

- Measurement-control-regulation
- Mechanical and system engineering
- Automotive
- Electro-medical

special features

- Gold contacts, reliable switching with low currents
- Special tactile feedback
- Different operating forces
- Variable overall heights due to plunger
- Terminal technology: SMT or THT
- Traceability through product identification
- sealable (tested media see Downloads)

description

Our top-quality RACON 12 tactile switches – in the dimensions 12 x 12 mm – feature an unmistakeable click, high switching reliability, a sealed contact system and castability. That has made RACON the standard in many industries. Whether for automotive applications, systems with keycaps, or membrane keyboards, RACON impresses in the THT or SMT versions – for your application too.

RACON 12 tactile switches can be arranged individually, in rows or as key blocks. When used beneath membrane overlays, the RACON key switches should be combined with plungers. Suitable for the most important soldering techniques.

Soldering bath for THT versions
Reflow soldering for SMT versions
Vapor phase soldering for SMT versions
Manual soldering
Processing of the SMT designs with SMT automatic assembly machines
IMDS entry

technical data

general

Color	blue
Operating temperature, min.	-40 °C
Operating temperature, max.	125 °C
Storage temperature, min.	-50 °C
Storage temperature, max.	90 °C
illuminated	No
Soldering time for manual soldering, max.	5 sec

direct links

- RAFI eCatalog

The information in this data sheet only contains general descriptions and / or performance features, which may not apply precisely as described to the respective application, and which my change due to further product enhancements. The technical data, illustrations and other information about our products are the mere results of individual technical testing. These descriptions and other product features are only binding if they expressly agreed upon at the time of the conclusion of a binding contract. In all other cases, we reserve the right to make technical changes as well as changes of availability. Pictures and other graphic illustrations are approximations only. All product names may be trademarks or brand names of the RAFI Group or any other sub-supplier of RAFI. The use of such by any third parties for their own purposes may infringe the rights of the respective entity holding those rights.

RAFI GmbH & Co. KG

Ravensburger Str. 128-134
88276 Berg / Ravensburg
Germany
www.rafi-group.com,
info.headquarters@rafi-group.com

Soldering temperature for manual soldering	350 °C
Soldering temperature for wave soldering	260 °C
Soldering	Manual / wave
Solder heat resistance according to standard	DIN EN 60068-2-20
Packaging	Tube
Packaging unit	45 pcs.
net weight	1.2 g
Operating life	1,000,000 cycles
B10	1,300,000 cycles
Degree of protection, front side, according to ISO 20653	IP67 (IP6K7)
Degree of protection on rear side acc. to ISO 20653	IP67 (IP6K7)
MSL Moisture Sensitivity Level	1
Corrosive gas testing according to standard	Yes
MOQ order	450 pcs.
RoHS compliant	Yes
REACH compliant	Yes
Product code	TB
> mounting diameters	
Outside dimension, length	12 mm
Outside dimension, width	12 mm
Installation height	4.95 ± 0.1 mm
Grid, min.	12.50 x 15.24 mm
> mechanical data	
Actuation function	momentary contact function
Operating force, max.	8 N
Operating force, min.	3.6 ± 0.7 N
Switching travel	0.61 ± 0.15 mm
Bounce time at 10 mm/s	<5 ms
Contact function	1 NO
Contact system	Snap-action contact SPST - Single Pole Single Throw
Contact material	Gold
Solderability	Yes
Terminal on the rear	THT inward
> electrical data	
Rated voltage, min.	0.02 V
Rated voltage, max.	35 V
Rated current, min.	0.00001 A
Rated current, max.	0.1 A
Rated power, max.	1 W

The information in this data sheet only contains general descriptions and / or performance features, which may not apply precisely as described to the respective application, and which my change due to further product enhancements. The technical data, illustrations and other information about our products are the mere results of individual technical testing. These descriptions and other product features are only binding if they expressly agreed upon at the time of the conclusion of a binding contract. In all other cases, we reserve the right to make technical changes as well as changes of availability. Pictures and other graphic illustrations are approximations only. All product names may be trademarks or brand names of the RAFI Group or any other sub-supplier of RAFI. The use of such by any third parties for their own purposes may infringe the rights of the respective entity holding those rights.

RAFI GmbH & Co. KG

Ravensburger Str. 128-134
88276 Berg / Ravensburg
Germany
www.rafi-group.com,
info.headquarters@rafi-group.com

drawings

Dimensioned drawing

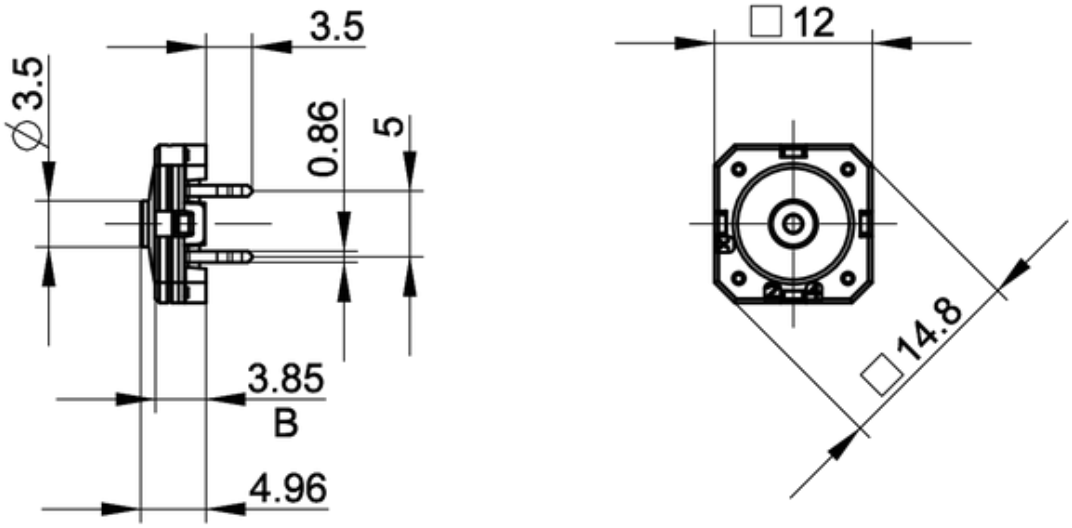

System drawing

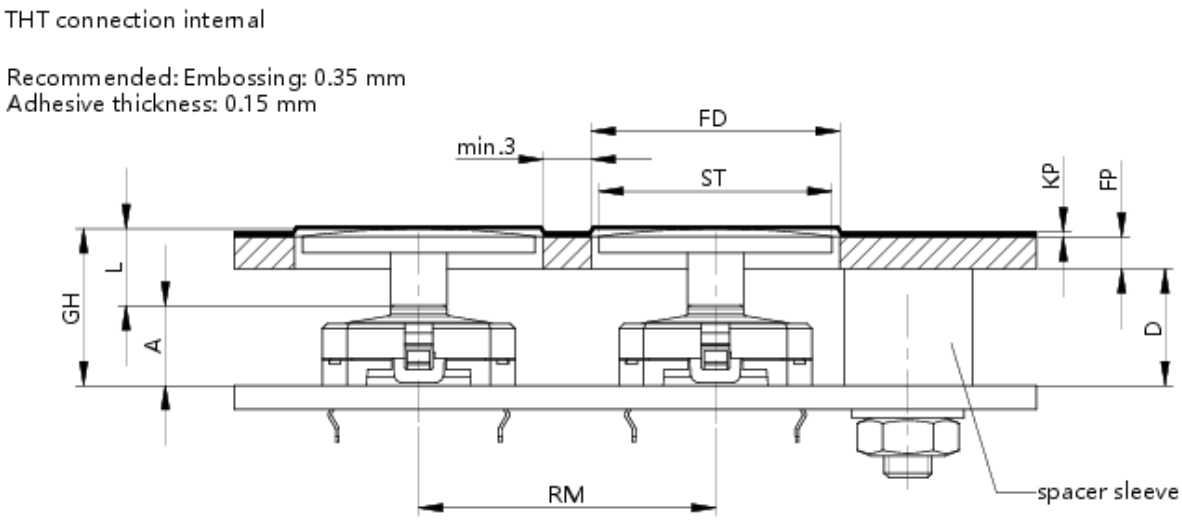

The information in this data sheet only contains general descriptions and / or performance features, which may not apply precisely as described to the respective application, and which my change due to further product enhancements. The technical data, illustrations and other information about our products are the mere results of individual technical testing. These descriptions and other product features are only binding if they expressly agreed upon at the time of the conclusion of a binding contract. In all other cases, we reserve the right to make technical changes as well as changes of availability. Pictures and other graphic illustrations are approximations only. All product names may be trademarks or brand names of the RAFI Group or any other sub-supplier of RAFI. The use of such by any third parties for their own purposes may infringe the rights of the respective entity holding those rights.

RAFI GmbH & Co. KG

Ravensburger Str. 128-134
88276 Berg / Ravensburg
Germany
www.rafi-group.com,
info.headquarters@rafi-group.com

System drawing

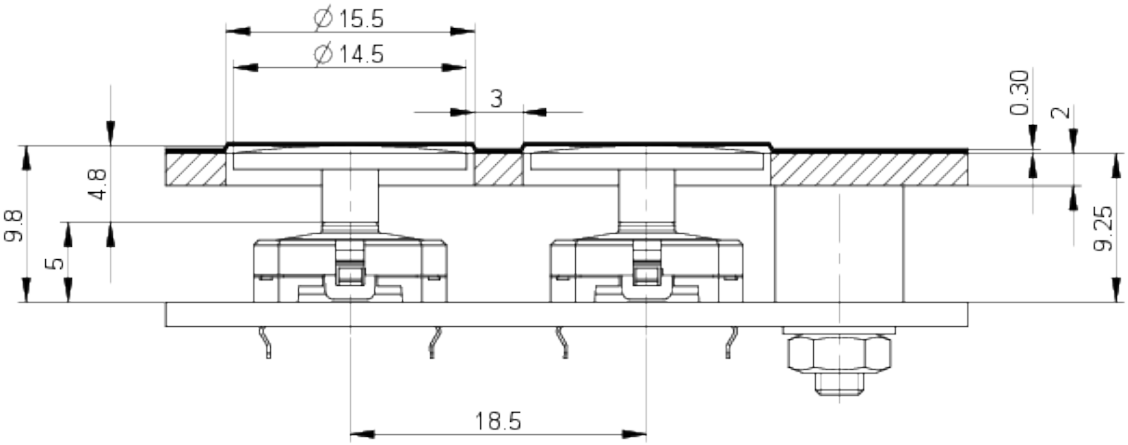

System drawing

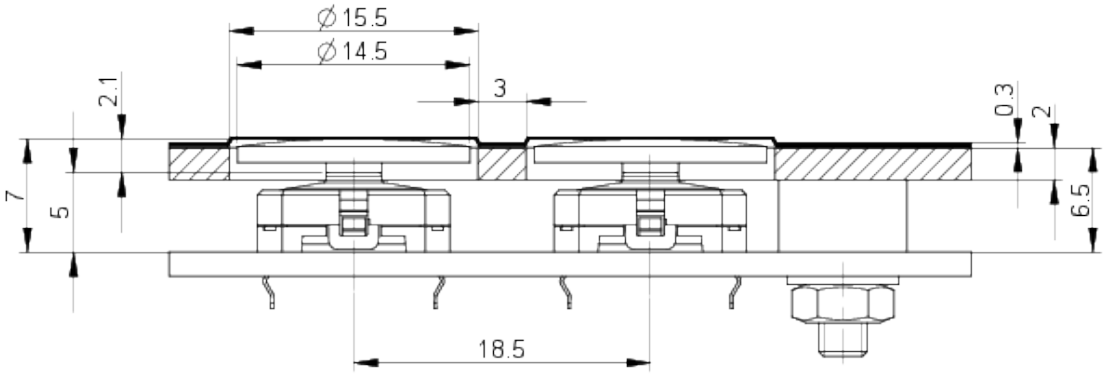

The information in this data sheet only contains general descriptions and / or performance features, which may not apply precisely as described to the respective application, and which my change due to further product enhancements. The technical data, illustrations and other information about our products are the mere results of individual technical testing. These descriptions and other product features are only binding if they expressly agreed upon at the time of the conclusion of a binding contract. In all other cases, we reserve the right to make technical changes as well as changes of availability. Pictures and other graphic illustrations are approximations only. All product names may be trademarks or brand names of the RAFI Group or any other sub-supplier of RAFI. The use of such by any third parties for their own purposes may infringe the rights of the respective entity holding those rights.

RAFI GmbH & Co. KG

Ravensburger Str. 128-134
88276 Berg / Ravensburg
Germany
www.rafi-group.com,
info.headquarters@rafi-group.com

PCB drawing

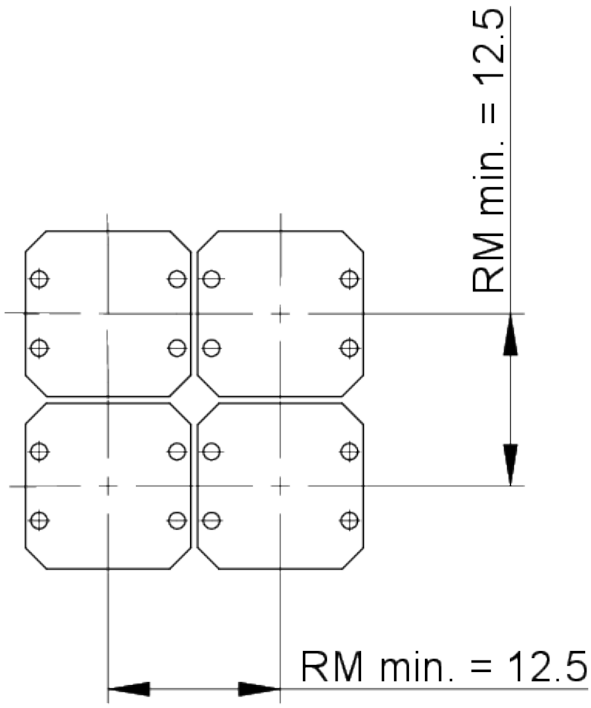

PCB drawing

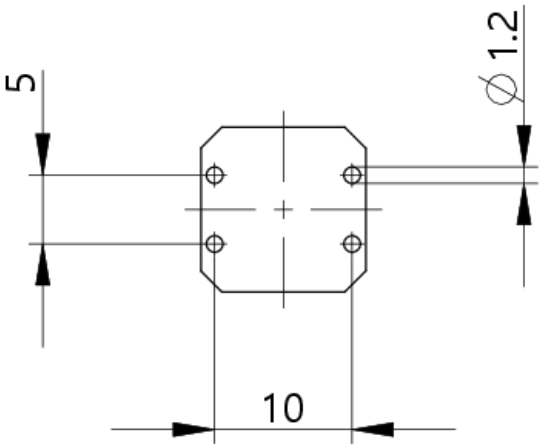

PCB hole pattern
component side

The information in this data sheet only contains general descriptions and / or performance features, which may not apply precisely as described to the respective application, and which my change due to further product enhancements. The technical data, illustrations and other information about our products are the mere results of individual technical testing. These descriptions and other product features are only binding if they expressly agreed upon at the time of the conclusion of a binding contract. In all other cases, we reserve the right to make technical changes as well as changes of availability. Pictures and other graphic illustrations are approximations only. All product names may be trademarks or brand names of the RAFI Group or any other sub-supplier of RAFI. The use of such by any third parties for their own purposes may infringe the rights of the respective entity holding those rights.

RAFI GmbH & Co. KG

Ravensburger Str. 128-134
88276 Berg / Ravensburg
Germany
www.rafi-group.com,
info.headquarters@rafi-group.com

Schematic diagram

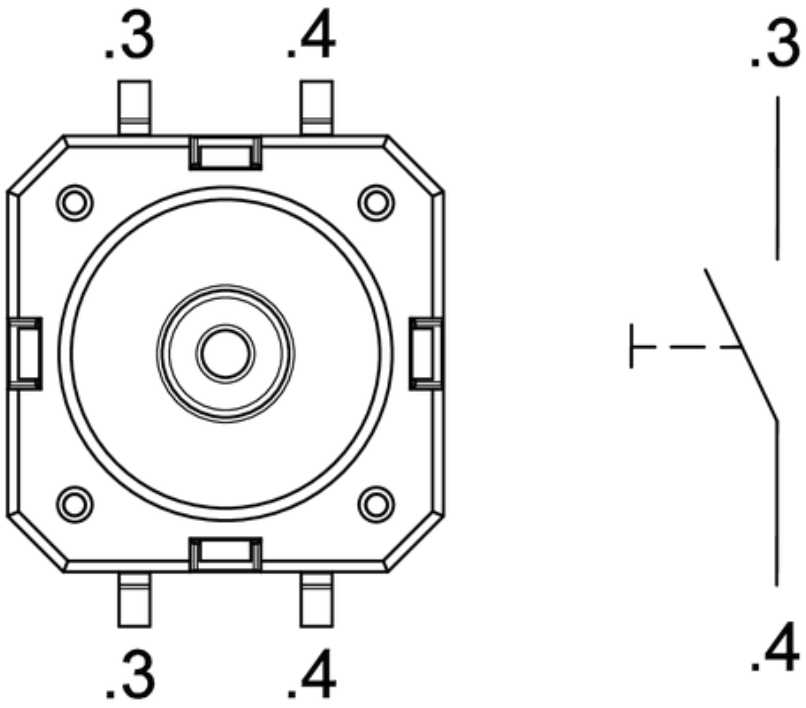

Product labeling drawing

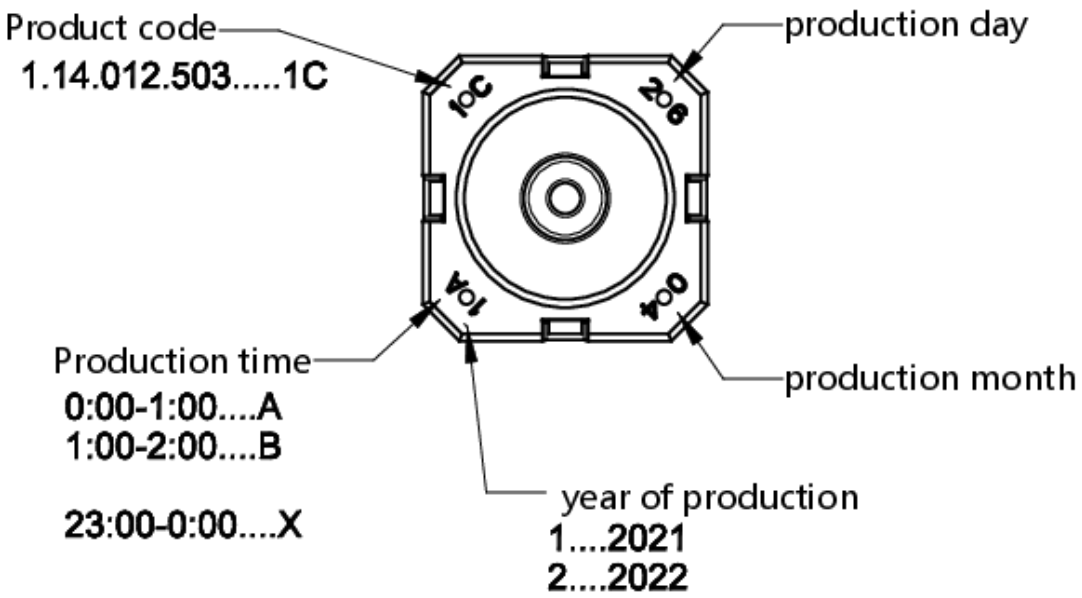

The information in this data sheet only contains general descriptions and / or performance features, which may not apply precisely as described to the respective application, and which my change due to further product enhancements. The technical data, illustrations and other information about our products are the mere results of individual technical testing. These descriptions and other product features are only binding if they expressly agreed upon at the time of the conclusion of a binding contract. In all other cases, we reserve the right to make technical changes as well as changes of availability. Pictures and other graphic illustrations are approximations only. All product names may be trademarks or brand names of the RAFI Group or any other sub-supplier of RAFI. The use of such by any third parties for their own purposes may infringe the rights of the respective entity holding those rights.

RAFI GmbH & Co. KG

Ravensburger Str. 128-134
88276 Berg / Ravensburg
Germany
www.rafi-group.com,
info.headquarters@rafi-group.com