Pushbutton non-illuminated - mounting hole diameter 18.2 mm, screw terminals, 1 NC + 1 NO, black

1.01.102.011/0104

General information	
Form of lens	protruding lens
Color of lens	opaque black
Form of collar	round

Dimensions	
Diameter of collar	22 mm
Overall height	10.5 mm
Mounting depth	34 mm
Mounting hole	18.2 mm

Mechanical design	
Mounting	ring nut
Terminals	screw terminals
Contact system	sliding bridge contact
Contact function	momentary
Contact arrangement	1 NC + 1 NO
Contact materials	Ag
Illumination	no
Lamp socket	no

Mechanical characteristics	
Operating force max.	9.5 N
Operating travel	5 mm
Switching travel NC	2.1 mm
Switching travel NO	3.7 mm
Robustness max.	100 N

Electrical characteristics	
Rated voltage AC max.	250 V
Rated current max.	2 A
Contact resistance acc. to life max.	200 mΩ

Other specifications	
Operating life (operations)	50,000 cycle
Degree of protection from front side	IP40 acc. to DIN EN 60529 (IP65 with sealing cap)
Operation temperature min.	-25 °C
Ambient temp. operating max.	+85 °C
Storage temperature min.	-40 °C
Storage temperature max.	+90 °C

Technical data are approximate and intended solely for general orientation in the selection of a product.
Subject to modifications and errors. Images and other graphics may only be similar.
For more information, refer to www.rafi.de chapter Imprint / Data Protection.

Environmental restistance	acc. to IEC 60068-2-14, -30, -33 and -78
Weight	14 g
Flame class acc. to UL 94	V 0
Hot wire ignition acc. to IEC 60695-2-1	yes
ROHS compliant	yes
REACH compliant	yes

Mounting hole

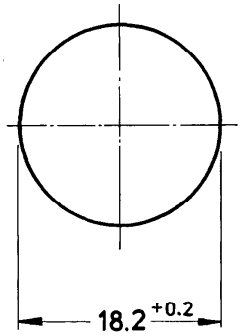

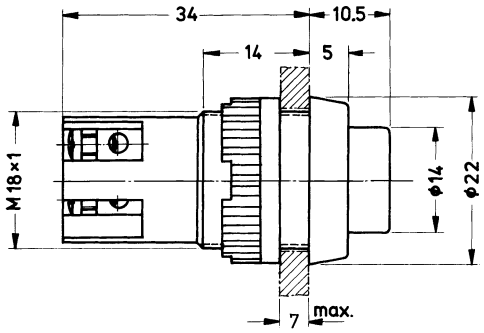

Technical data are approximate and intended solely for general orientation in the selection of a product.
Subject to modifications and errors. Images and other graphics may only be similar.
For more information, refer to www.rafi.de chapter Imprint / Data Protection.