Alle Rechte vorbehalten/ *All rights reserved*

Harnessing dimensions for cables RG178BU BU, RG196AU, RG404U

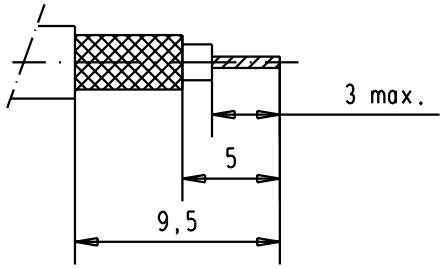

Scale 3:1

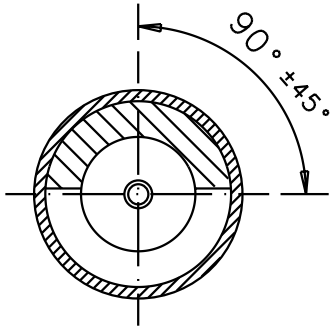

A - A
Solder pot position

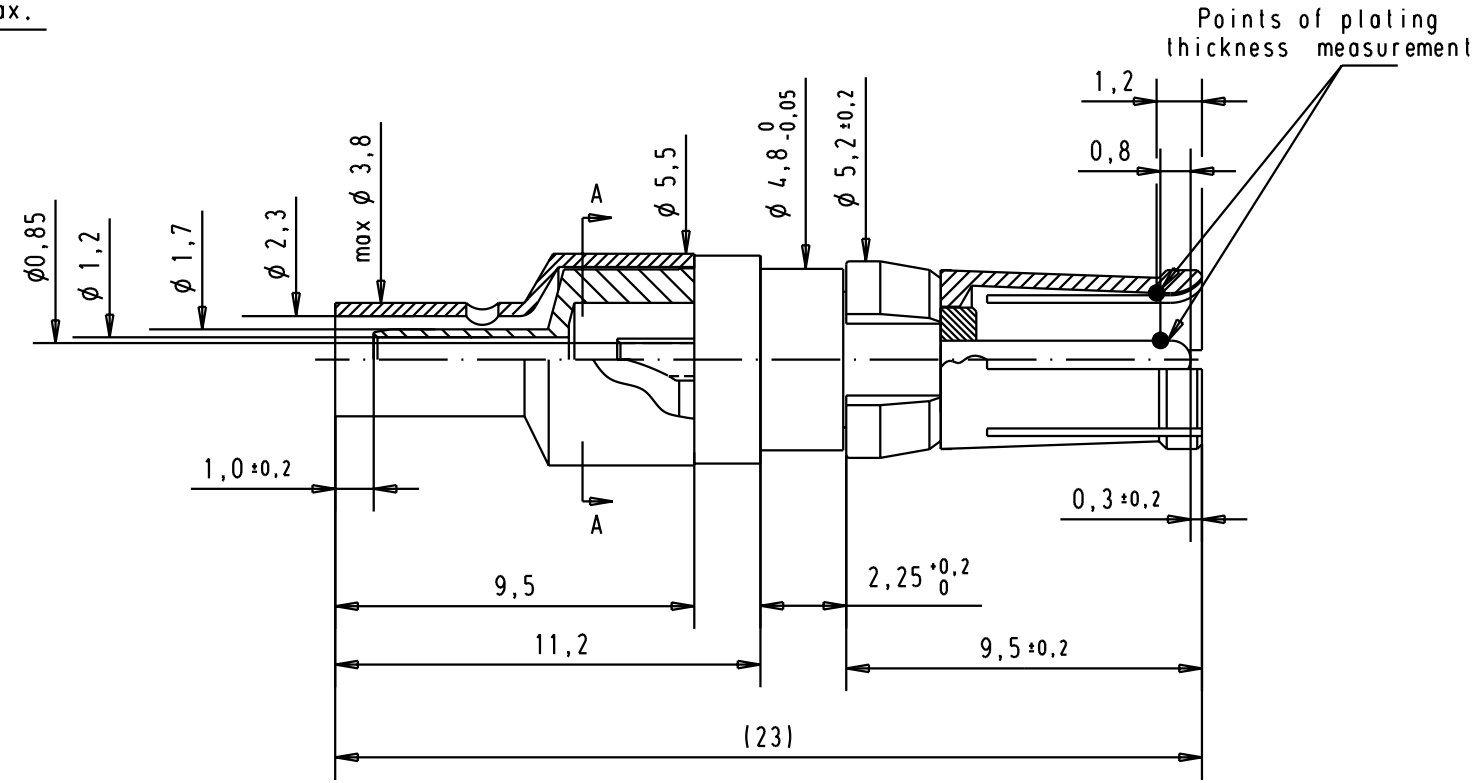

Crimping of outer conductor:
hand tool: 09 99 000 0503 00
die: 09 99 000 0508 00

Part number	Plating	outer conductor	inner conductor
09691817141	Mating area	0,2 µm Au	0,2 µm Au
	Termination area	5 µm Sn	0,2 µm Au
09691815141	Mating area	0,8 µm Au	1,3 µm Au
	Termination area	0,2 µm Au	1,3 µm Au

Mod.	Dat.	Name
31057	21-JUN-02	CV

	Dat.	Name
Detail.	21-JUN-02	CV
Insp.		
Stand.		

All Dim. in mm
Orig. Size DIN A 4

HARTING EURL
F-95972 Paris

Female coaxial contact, 50 Ohms straight cable terminaison
inner conductor for solder termination, outer conductor for solder or crimp termination

Maßstab/ *Scale* 5:1

TB 09 69 181 x141

Sub.

Blatt/ *Page* 1/1