Alle Rechte vorbehalten/ *All rights reserved*

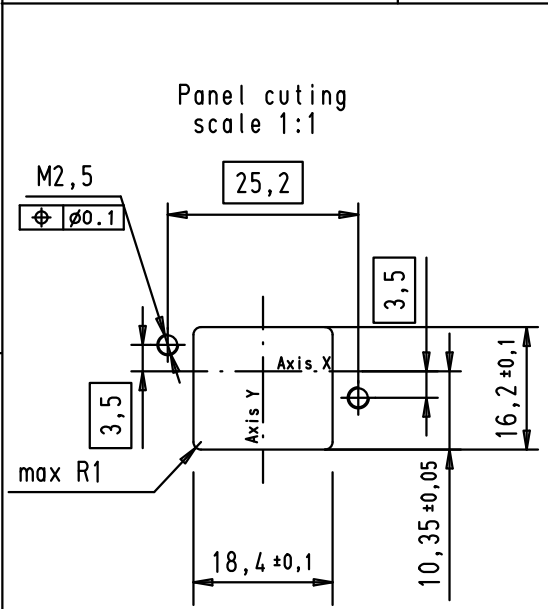

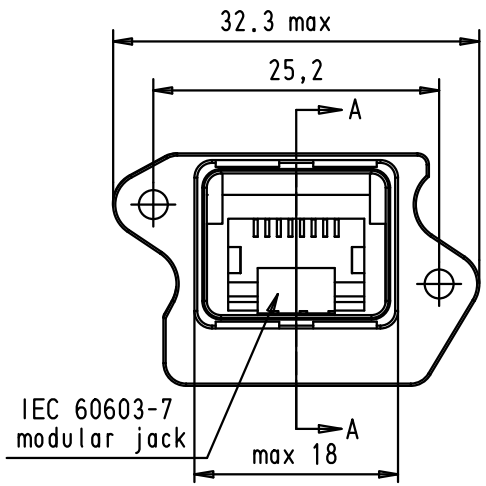

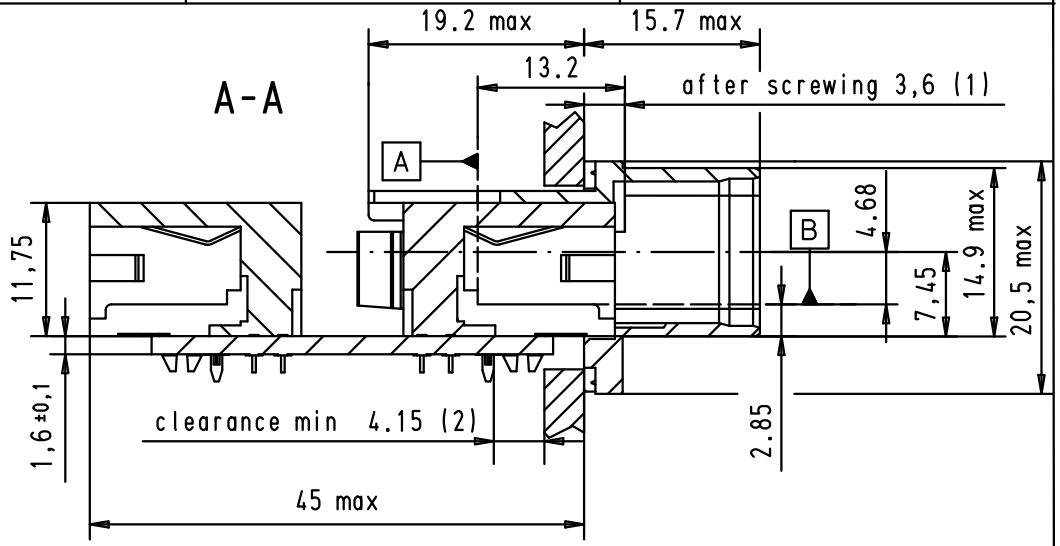

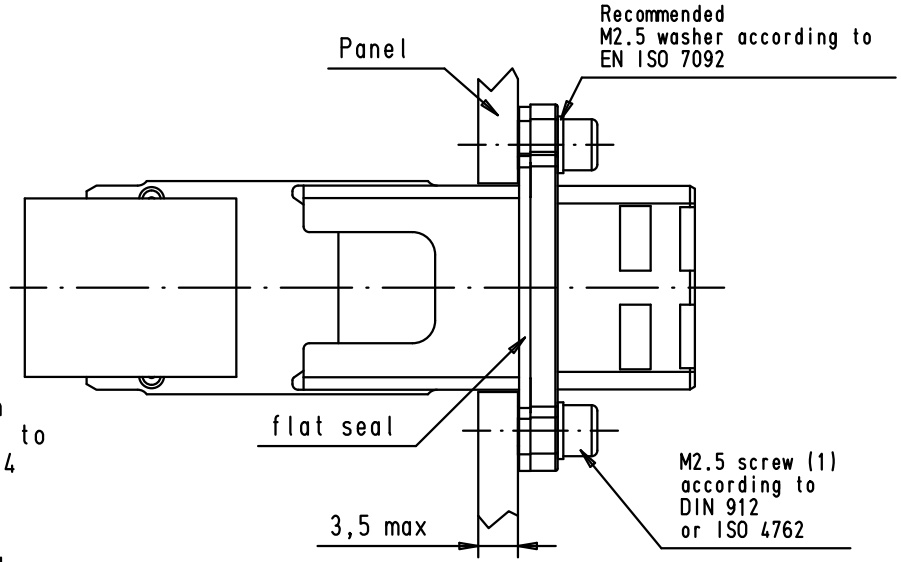

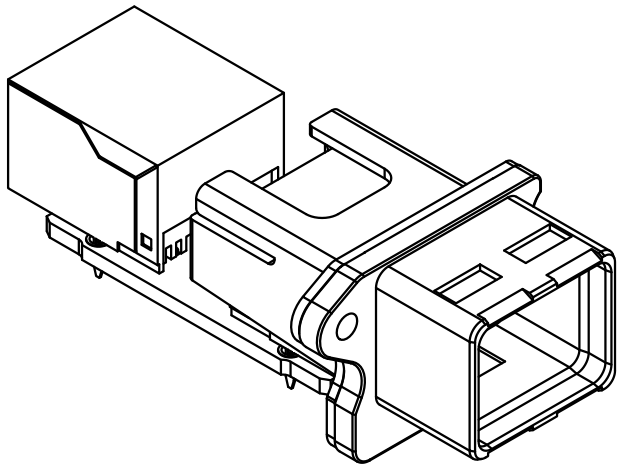

(2) see design report 54

Connector pitch on panel
Axis X=27mm and Axis Y=21mm
Receptacle ;ating face acc. to
600076-3-106 IEC - variant 4

mating references A and B
according to IEC 60603-7
(1) Screwing torque = 0.3 N.m

09 45 245 1102	0.38µm Au over Ni
Part Number	Data Contact Plating

Mod.	Dat.	Name
33114	05/10/05	AM
33107	23/09/05	AM
33084	01/09/05	AM

	Dat.	Name
Detail.	01/09/05	AM
Insp.		
Stand.		

All Dim. in mm
Orig. Size DIN A 4

HARTING EURL
F-95972 Paris

RJ-Industrial
Push pull RJ industrial
Thermoplastic IP67 Receptacle
M2.5 screws

Maßstab/ *Scale* 1.5:1

TB 09 45 245 1102

Sub.

Blatt/ *Page* 1/1