BASE PART NUMBER	THICKNESS	MATERIAL	STANDARD LENGTH PART NUMBER
0097-0983 (STANDARD)	0.152 ± 0.005 [0.0060]	BeCu ALLOY 25 TH01	0097098302

PLATING CODE TABLE	
NUMBER CODE	PLATING TYPE
02	BRIGHT FINISH
17	BRIGHT TIN
19	BRIGHT NICKEL
MORE PLATING OPTIONS AVAILABLE CONTACT LAIRD SALES FOR DETAILS	

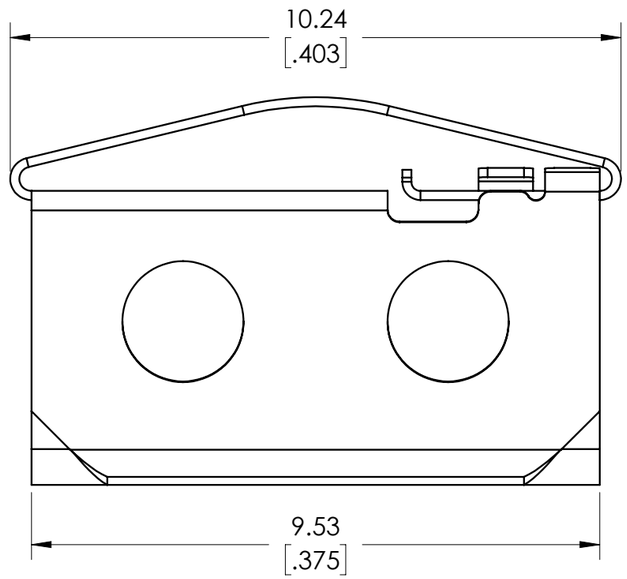

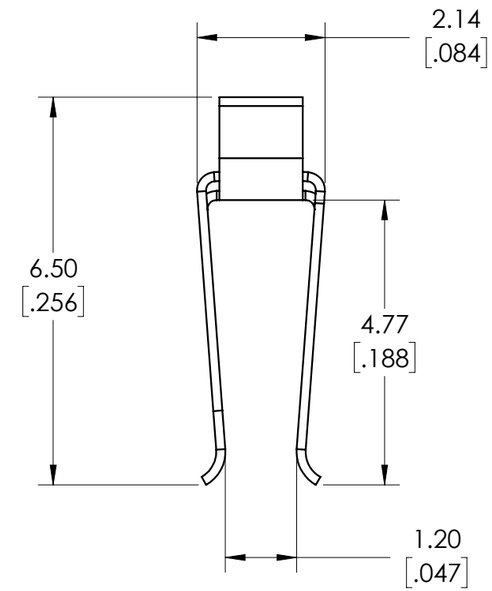

PART NUMBER CONFIGURATION:
00970983 XX

PLATING CODE
(SEE TABLE)

EXAMPLE: 0097098317
BRIGHT TIN PLATING

UNITS: MM [INCH]	Laird	LAIRD DRAWING NUMBER: 0097-0983-SALES
TOLERANCES: X.X = ± 0.4, X.XX = ± 0.2, X.XXX = ± 0.1	3RD ANGLE PROJECTION	THIS IS AN UNCONTROLLED SALES DRAWING. THE DIMENSIONAL CHARACTERISTICS AND TOLERANCES OF THIS PART SHOWN ON THIS DRAWING AS A REFERENCE TO THE DIMENSIONAL SPECIFICATIONS OF THE LAIRD STANDARD PRODUCTION DRAWING FOR THIS PART. ANY SUBSEQUENT CHANGES TO THE STANDARD PART SPECIFICATION WILL SUPERSEDE THIS SALES DRAWING.
ANGULAR: X° = ± 3°, X.X° = ± 1.0°	DESIGNED IN SOLIDWORKS / SCALE: 10:1 / SHEET 1 OF 1	SIZE B